Jessa House, 250 High Street, Watford, WD1 2AN, England
Tel: Watford (0923) 37774, Telex: 8956095 WATFRD, FAX: 01 950 8989

The Beeb PCB Designer User Manual

Watford Electronics

THE WATFORD PCB DESIGNER REFERENCE HANDBOOK

Watford Electronics

Published in the United Kingdom by
Watford Electronics
Jessa House
250 Lower High Street
Watford
WD1 2AN
England

Telephone 0923 37774
Telex 8956095
Fax 01 950 8989

Software and Manual © L M Rayner/Watford Electronics 1988
Handbook written by D J & P Rayner.
Software written by L M Rayner.

All rights reserved. This book is copyright. No part of this book can be copied or stored by any means whatsoever whether mechanical, photographical or electronic except for private study use as defined in the Copyright Act. All enquiries should be addressed to the publishers.

While every precaution has been taken in the preparation of this book, the publisher assumes no responsibility for errors or ommisions. Neither is any liability assumed for damages resulting from the information contained herein.

The following are trademarks of the companies indicated :

Master Computer copyright Acorn Computers Ltd
BBC B Computer copyright Acorn Computers Ltd

This book was computer typeset by
Ideal Software Consultants, 11 Hathaway Close, Luton, Bedfordshire .

Watford Electronics have now been established for over 15 years. We are one of the major electronics distributors and retailers in the country, supplying thousands of different electronic components and computer peripherals, by mail order, and through our retail outlet at Watford. We specialise in the BBC microcomputers and associated products. Contact us for all your electronics and computing requirements.

TABLE OF CONTENTS

Chapter 1 - GETTING STARTED

Introduction	1-1
Making a Backup copy	1-2
Fitting The Program ROM	1-3
Hardware Requirements	1-4
Changing RAM Positions	1-5
Shadow Board Commands	1-6
Discs And Directories	1-7
Making A New Library Disc	1-8
Trackerball/Mouse Button Functions	1-9
PCB PRODUCTION PHILOSOPHY	1-10
Double Sided PCB's	1-11
Single Sided PCB's	1-12
Surface Mounted And Mixed Technology PCB's	1-13
Multilayer PCB's	1-14
Booting The Program	1-15
THE MAIN MENU	1-16
Load Board	1-17
Save Board	1-18
Clear Board	1-19
Read Netlist	1-20
Default Settings	1-21
Memory Left (Garbage Search)	1-22
O.S. Commands	1-23
OTHER PROGRAMS	1-24
The Board Designer	1-24
The Component Designer	1-25
The Netlist Editor	1-26
The Component list Editor	1-27
Plotter Output Generator	1-28
Dot Matrix Output Generator	1-29
The External Applications Program	1-30
PCB DESIGN PROCEDURE	1-31
Methods Of Drawing A PCB	1-32
Manual Input	1-33
Automatic Input	1-34

Chapter 2 - THE LIBRARY COMPONENT DESIGNER

Introduction 2-1
Component Name Description 2-2
Duality Of Component Names 2-3
Component Footprint 2-4
Solder Pads 2-5
THE EXECUTIVE MENU 2-6
- Command Keys 2-7
- Load Or Retrieve Component From Disc 2-8
- Save Component To Disc 2-9
- New Component 2-10
- Altering A Component Name 2-11
- Listing Components To Screen Or Printer 2-12
- Listing The Pad Sizes 2-13
- The Edit Command 2-14
- Erasing A Component 2-15
- Changing All Pad Sizes 2-16
- Return To The Main Menu 2-17

THE EDIT MENU 2-18
- Meaning Of The Information Panel 2-19
- Pad Number (Size) 2-20
- Direction Of Drawing 2-21
- Pin Number 2-22
- Identification Of Pin Numbers 2-23
- Number Of Elements Left To Draw With 2-24

THE MENU COMMANDS 2-25
- Starting Position 2-25
- Footprint/Pad Command 2-26
- Place Pad Command 2-27
- Pin Number Of Pads 2-28
- Mounting Holes 2-28
- Surface Mounted Or Normally Mounted Components 2-29
- Viewing Direction Of Components 2-30
- Components Intended For Bottom Mounting 2-31
- Drawing And Moving 2-32
- The Move/Draw Command 2-33
- Direction Of Movement Or Drawing 2-34
- Removing Elements Of The Design 2-35
- Changing the size, shape and drilling holes of a pad 2-36
- Returning Control To The Executive Menu 2-37

Chapter 3 - THE COMPONENT LIST EDITOR

Introduction 3-1
The Component List Editor Menu 3-2
Loading In A File 3-3
Saving Component Lists 3-4
Aborting A Save 3-5
Testing The Component File 3-6
Hard Copy Printout Of Component List 3-7
Listing The File To Screen 3-8
Adding Entries Into Component List 3-9
Inserting A Component Line 3-10
Deleting A Component Line 3-11
Erase A File 3-12

Chapter 4 - THE NETLIST EDITOR

Introduction 4-1
The Netlist Editor Menu 4-2
Loading A Netlist Into The Editor 4-3
Saving A Netlist 4-4
Testing A Netlist 4-5
Printing Out A Netlist 4-6
Listing A Netlist To The Screen 4-7
Creating A Netlist Line 4-8
Correct Format Of A Netlist Line 4-8
Finishing A Netlist Line 4-9
Inserting A Line 4-10
Deleting A Line 4-11
Erasing The File 4-12
Track Thickness Command 4-13

Chapter 5 - THE BOARD DESIGNER

Introduction 5-1
Menu Description In Brief 5-2
The Message Panel 5-3
Description Of Lower Menu Panel 5-4
MENU ITEMS DESCRIBED 5-5

MOVE

Move Component 5-6
Move Track 5-7
Cutting A Track Route 5-8
Keyboard Command Keys 5-8
Removing A Section Of Track 5-9
Move Area 5-10
Move (modify) The PCB Outline 5-11
Move Footprint Words 5-12
Move Board (copper) Words 5-13
Move Edge Connector Fingers 5-14

ERASE

Erase Component Or Via 5-15
Erase Track 5-16
Erase Edge Connector Fingers 5-17
Erase Copper Areas 5-18
Erase Board (copper) Words 5-19
Erase Footprint Words 5-20
Erase PCB Outline 5-21
Erase Pads 5-22
Erase RNEST 5-23

TRACK

Keyboard Commands 5-24
Place Tracks 5-24
Vias 5-25
Side Of PCB For Tracks 5-25
Size Of Tracks 5-26
Finish Track 5-27

COMPONENTS

Place Components 5-28
Manual Component Entry 5-29
Side Of PCB For Placing Component 5-30
Single Sided PCB Component Placement 5-31
Copy Component Entry 5-32
Auto Component Entry 5-33

FINGER

Edge Connectors 5-34
Number Of Fingers 5-35
Pitch Of Fingers 5-36
Length Of Fingers 5-37
Double Sided Edge Connectors 5-38
Origin Or Connection Point 5-39
Plating Bar 5-40

COPPER

Placing Copper Areas 5-41
Connectivity To Areas 5-42
Side Of PCB 5-43

BOARDWORD

Text Placed In Copper 5-44
Bottom Side Of Text 5-45
Top Side Of Text 5-46
Rotation Of Text 5-47

FOOTPRINT WORD

Silk Screen Text 5-48
Side Of PCB 5-49
Relation To The Component Reference Number 5-50
Rotation Of Text 5-51

AREA

Area Command 5-52

BOARD EDGE

Board Edge (outline of PCB)	5-53
Size Of PCB Outline	5-54
File Size Of PCB Outline	5-55
Angular Lines And Sections	5-56
Completing The Outline	5-57
PCB outlines with more than one continuous edge	5-58

PAD

The Pad Command	5-59
Pad Shapes And Sizes	5-60
Empty Pads And Single Sided Pads	5-61
The Message Panel Commands ALL/1/D	5-62

RATSNEST

The Ratsnest Command (RNEST)	5-63
Generation Of The Ratsnest	5-64
Skipping Through The Netlist	5-64
Routing From A Ratsnest Connection	5-65
Changing The Track Size	5-66
Changing The Track Side	5-67
Routing The Body Of The Track	5-68
Routing The Last Segment Of The Track	5-69
Memory Bussing (copy route commands)	5-70
Creating A Single Ratsnested Track (Connection)	5-71

Chapter 6 - THE PLOTTER ARTWORK GENERATOR

Introduction	6-1
Paper Media	6-2
Pens, Nibs And Inks	6-3
Care Of Pens	6-4
Plotter Command Menu	6-5
Plot Types	6-6
Top And Bottom Artwork/Tracks	6-7
First Checkplot	6-8
Colours Of Pens	6-8
Silk-Screen Plots	6-9
Drilling Position Drawing	6-10
Solder Mask Output	6-11
Side Of PCB To Be Plotted	6-12
Top side	6-13
Bottom Side	6-14
Scale Of Output Plots	6-15
Plotting The Board Outline	6-16
Rotation Of Plot	6-17
Plotting Pads With Holes	6-18
X And Y Offset Of Plots	6-19
Plotter Drawing Area Versus Board Area	6-20
Out Of Area Example	6-21
Number Of Pens In Use	6-22
Dumping Plotter Files To Disc	6-23
Allowing For Different Sizes Of Pen Nibs (Width)	6-24
Recommended Pen Sizes	6-25
Pen Sizes For 2:1 Plots	6-25
Plotting Pads With Holes	6-26
Variation In Thickness Of Plotted Lines	6-27
Guaging The Correct Setting For The W Option	6-28
Mirror Image Command	6-29
The Go Command	6-30
Returning To The Main Menu	6-31

Chapter 7 - THE DOT MATRIX PRINTER ARTWORK GENERATOR

Introduction 7-1
Paper Media 7-2
Stability Of Media 7-3
Command Description 7-4
Plot Types 7-5
Top And Bottom Tracks 7-6
Silkscreen Plots 7-7
Hole Layout (Drilling Details) 7-8
Solder Mask (Solder Resist Silkscreen) 7-9
Side of PCB To Be Plotted 7-10
Top 7-11
Bottom 7-12
Scale Of Output Plots 7-13
Edge Of PCB 7-14
90 Degree Rotation 7-15
Plotting Of Pad Holes 7-16
X and Y Offsets On The Paper 7-17
Area Of Drawing To Plot 7-18
Size Of Printer Paper 7-19
Spliting Up The Drawing 7-19
Pause During Paper Change 7-20
Form Feed 7-21
Number Of Passes Of Print Head 7-22
Mirror Image Printing 7-23
Modifying The Printer Graphics Codes 7-24
Standard Codes As Supplied 7-25
GO Command 7-26
Return To Menu 7-27

Chapter 8 - THE EXTERNAL APPLICATIONS PROGRAM

Summary 8-1
Operation 8-2

Chapter 9 STEP BY STEP EXAMPLE OF COMPLETE DESIGN PROCEDURE

Introduction And Objective 9-1
Order Of Completing The Parts Of The Design 9-2
Designing The PCB Outline 9-3
Component List Generation 9-4
Bill Of Materials 9-5
Place Components 9-6
Adding Footprint Words 9-7
Creating A Netlist 9-8
Netlist Entry 9-9
Component Position Readjustments 9-9
Routing The Tracks 9-10
Moving Components And Re-ratsnesting 9-11
Moving Tracks 9-12
HINTS AND TIPS 9-13
Side Of PCB When Starting Tracks 9-14
Altering The Start Point Of A Ratsnest Connection 9-15
Clearing The Screen Of Unwanted Items 9-16
Routing Directions 9-17
Out Of Order Routing 9-18
Correcting Routing Mistakes 9-19
Moving Connections To Clear The Viewpoint 9-20
Changing The Thickness Of Routed Tracks 9-21
Entering A Via 9-22
Deleting A Via 9-23
Changing The Size Or Shape Of Pads 9-24
Adding Board Words (in copper) 9-25
Adding Extra Sections Into A Route 9-28
Changing The Side Of The PCB A Track Is On 9-29
Deleting A Track 9-30
Necking A Track 9-31
Saving The PCB Design 9-32

APPENDIX
A - Library Component Shapes
B - Standard Pad Sizes And Holes
C - Suggested Rules For Giving Names To Components
D - Glossary
E - Error Trapping Messages
F - Plotter Compatibility Information

CHAPTER 1
GETTING STARTED

1-1 Introduction

Welcome to the world of CAD printed circuit board design and thank you for choosing the WATFORD PCB DESIGNER.

You will soon come to appreciate that this program is far more than 'just another drawing package' and hopefully the instructions given in this manual will enable you to use the software package to the full, in a very short time.

There is no substitute for practical experience and we fully expect you to dive straight in without reading very much of this manual. We hope that the structure of the programs and menus allow you to do just this. However when you do come up against a problem, the manual should help you. Just look up the relevant subject in the contents list and start at the place indicated. In all probability you will find that you are dropped into the middle of a section and if all you need is a reminder, then that's fine. If you need more information then go to the beginning of the section and read from there.

Although the major part of this handbook is written as a reference manual, several sections are written as 'required' reading, particularly chapters 1 and 9. For those who like to fully understand how to use a program we have included some sample files on the library disc supplied and these are for use with chapter 9 which takes the user through a tour of PCB design using most of the features of the package.

Chapter 9 also includes a number of operations that are vital to a good PCB design, but which are not immediately apparent by looking at the menus. e.g. Changing a track thickness. If you are stuck with a seemingly impossible requirement, do look at the sections in chapter 9 to see if it has been described.

At the end of this manual you will find a number of useful appendices and a quick look at these now may enable you to find something helpful later.

1-2 Making A Backup Copy

Only non-write protected discs may be used with the package. For this reason both of the discs provided should be backed up and only the backup copies used.

On receipt of your package, cover the write protect notch on both discs and using the normal Acorn DFS commands, make a backup copy of them before using the package. Now put the original discs away in a safe place!

1-3 Fitting The ROM provided.

The rom provided with your package is a special chip containing extra electronic functions. It may be fitted in any spare sideways ROM socket in your computer, in the same way as normal sideways ROMs. Should you be using an upgraded BBC-B consult the instructions for fitting and using the RAM/ROM board.

1-4 Hardware Requirements

The PCB package requires a BBC Master computer. Alternatively a BBC B with two extensions to the memory may be used:

1) A Watford RAM/ROM board with 16k to 64k of sideways RAM fitted. This memory is used to store your PCB design and the amount you need depends upon the complexity of board you are going to create. Note that the size of the PCB is irrelevant, it is the number of components and tracks on the board that determines memory size needed.

2) A Watford 32k (shadow) RAM board. This is to allow the use of large disc programs and a MODE 1 screen at the same time.

The package also requires a mouse or a trackerball and at least one 40 track disc drive.

1-5 Changing RAM socket positions

If you are using an upgraded BBC B the program assumes that sideways RAM will exist in socket 0 (16k system) and up to socket 3 (64k system). If

you want to use different sockets, for example to make use of static RAM in socket 14, the program can be preset to allow this. To do this, CHAIN the program called "SETWAT" on the program disc provided. Note that by now you should be using a back-up copy so that you can write to it.

Follow the program instructions by entering S and the relevent socket numbers for each logical bank of RAM 0-3. See below if you wish to change the shadow commands as well. Now enter E and a disc file will be overwritten with the new RAM accessing code. The program will now work using the new socket positions. If you are using more than 16K of sideways RAM see section 1-21 for instructions on setting the Max Memory default.

1-6 Different Shadow Boards

An upgraded BBC B usually uses a *FX command to switch between the two shadow screens. The program assumes that *FX 34,0 will switch the screen memory into the memory map and *FX 34,1 will switch the program memory into the memory map. If this is not the case with your make of board the "SETWAT" program may be used to enter new *FX numbers. Run the program as explained in section 1-5 except enter F and the relevent *FX numbers as requested.

1-7 Disc Drives And Directories

The package can use 1 or 2 disc drives. Drive 0 must always contain the program disc. The data disc may be used in a drive of your choice. See section 1-21 to set the drive you wish to use.

Your data files may be stored on a copy of the library disc or on a seperate disc. On a 2 disc system it is usually better to store them on the library disc, if they will fit, then no disc changing needs to be performed. On a 1 disc system it makes no difference, its your choice.

The various data files use different directories:

$ Component shape library	B Board Design
C Component list	N Netlist
O Plotter dump	

1-8 Making A New Library Disc

The package is supplied with a comprehensive library disc and many more components may be added to this library if desired. Depending upon how you use the package you may, at some future time, want to create an entirely new library on a fresh disc. To create a disc with an empty library carry out the following procedure:

Backup the library disc provided onto your new disc, now delete the sample files supplied with the system (*.ALARM) on your new disc. Boot the PCB package and enter the component designer program. Load in the first component in the file and save it back out again entering first its old name as requested and then "EOF****" for its new name. This will leave you with an empty file which can store 500 components. You may create PCB designs containing components from more than one library, since once withdrawn from the library, the details of the component are embodied within the drawing file.

NOTE:- It is not necessary to do this until you need a new library.

1-9 Trackerball/Mouse control Functions

The Board Designer part of the package requires the use of a trackerball or mouse connected to the USER PORT and is designed for use with a three-button device. However, the TAB, SPACE and RETURN keys on the keyboard replicate the 3 buttons on the pointing device and so two button devices may also be used.
The following table shows the intended functions of the buttons/keys.

BUTTON	KEY	FUNCTION
LEFT BUTTON	TAB	Change side of PCB
CENTRE BUTTON	SPACE	Select Action, Start Action, Continue Action (Corners etc.) Finish Action (Two Point Actions)
RIGHT BUTTON	RETURN	Finish Action (Multipoint Actions) Rotate Components Orientation of Text

The above function descriptions will be used in many parts of this manual to indicate which key or button you should push. e.g. "Select" will be used to indicate use of the centre button or space bar.

1-10 PCB Production Philosophy

PCB's are made by a process of chemical etching one or more surfaces of copper, bonded to an insulating carrier board.

Most modern PCB's are of two such surfaces on opposite sides of the board, usually linked from side to side at numerous places via 'plated through holes'.

The processes required to make PCB's are all photographically originated and this package can be used to generate all the photographic masters needed for single sided, double sided, plated through and with a little thought and care, four layer boards carrying power and ground on the internal layers.

1-11 Single Sided PCB's

Single Sided PCB's are the simplest to produce and the process can be described briefly by the following steps:-

a) Place an image of the tracks in close contact with a photo-resist coated board and expose it to Ultra-Violet light.

b) Develop the exposed board to harden those areas where the tracks are located.

c) Wash away the remaining resist.

d) Etch the unwanted copper from the board surface, leaving the track behind.

e) Plate the PCB tracks with tin to protect the copper and make it easy to solder.

f) Drill the holes in the PCB so that the components may be inserted from one side and soldered on the other.

g) Photograph the Solder Resist master on to a Silk-Screen and develop it.

h) Silk-Screen a Solder Resist pattern over the tracks to prevent unwanted soldering of the track areas during flow soldering.

i) Photograph the component layout onto a Silk-Screen and develop it.

j) Silk-Screen the component layout onto the top surface of the PCB to aid the assembly, test and repair of the PCB.

Although single sided PCB's are relatively easy to produce, especially in the laboratory or at home, they may be difficult to design since there is often no easy path for the tracks. With this PCB design package you may design the board as a double sided PCB and if appropiate, convert it to a single sided board at the last moment by placing links for the last remaining top-side tracks.

1-12 Double sided PCB's

With double sided PCB's the process is similar but there are many more Chemical stages if the PCB is to be plated through. In the home or laboratory where plated through holes are not required the process is similar to that given above except that both sides of the PCB are exposed at the same time in step a).
For PTH board the extra operations are:-

a) Drill the holes in the blank board first.
b) Plate the insides of the holes with copper.
c) Coat the board with Photo-resist.
d) Expose, develop, wash and etch as above.

Variations on this procedure are often found, usually involving extra plating operations.

All the masters required for Double sided and PTH PCB's are generated by this package.

1-13 Surface Mounted PCB's

Surface mounted components are becoming more and more popular and available these days and it is important to be able to mix both types of component mounting on the same PCB.

The main differences (in respect of PCB design) between the two types of component are that SMC's have:-

a) The solder pads on the same side of the PCB as the component.

b) Usually no holes in the pad and thus no PTH at the pad.

c) Rectangular pads of critical sizes in order that the component does not 'float' to the wrong place when being soldered.

This package supports SMC'S:-

a) By allowing SMC's to be defined as such in the component library.

b) By allowing any particular hole size to be defined as 'no hole'. Also pads may be allowed to be only on one side.

c) A variety of rectangular and square holes are provided as pad shapes.

1-14 Multilayer PCB'S

Although primarily provided as a two-layer PCB design package, Four-layer boards can be designed by using the Solder Resist plot as a master for power and ground tracks.

A small modification will have to be made to the masters to enable the connection to be made at one or more of the pads and the program will work best if the power and ground connections are left off the netlist.

1-15 Booting The Program

On a Master simply press SHIFT-BREAK with the program disc in drive 0.

Note that with an upgraded BBC-B your shadow RAM must be turned on, before you boot the PCB system, with whatever command you use for your board e.g. *RAMON for the Watford board.

1-16 Main Menu Summary

The main menu is the centre of the package and allows you to move between all the programs provided. It also has a number of facilities which in general relate to the board designer program.

These facilities are:

L	Load Board	D	Default Settings
S	Save Board	M	Memory Left
X	Clear Board	*	OS Command
R	Read Netlist		

1-17 Load Board

Loads a board file from disc into sideways RAM. You must clear the board using X before using this command. The load is made to the drive given in the default settings. To abort this command press RETURN when the filename is requested.

1-18 Save Board

Saves your board design to the drive determined by the default settings. To abort this command press RETURN when the filename is requested.

1-19 Clear Board

After confirmation, this clears your current board design in sideways RAM. Use with care!

1-20 Read Netlist

This command reads in the file created with the netlist editor and forms and places ratsnested tracks into your design. Enter the filename of the netlist file. If the corresponding component reference pin mentioned in the netlist is not found within your design the read is aborted and your design is not changed. You can test the whole netlist in one sweep in the netlist editor and this should be done first.

The tracks are placed on the top of the PCB although unlike normal tracks they can be 'picked up' using MOVE TRACK from EITHER side of the PCB in the board designer program.

1-21 Default Settings

There are 4 defaults which can be set up within the main menu. These are:

D	Second drive
I	Input Device
P	Palette
M	Max Memory
V	Via Size

D Cycles between 0,1,2 & 3 and selects which drive the system will attempt to find your data/library disc. Selecting 0 will cause the package to assume a 1 disc system and prompt all disc changes to the user.

I Toggles between mouse and trackerball input devices used in the board designer. Note that BREAK must be pressed if you wish to use the new input device straight away, as the relevent code is only loaded when the system is loaded.

P Allows you to set up the screen colours, to be used within the board designer, to your own taste. Don't change these until you have finished reading this manual otherwise you may be confused when we say for example "look at the red menu" and it is different on your screen!

M Is used to set up how much sideways RAM your system has, which can be used for the PCB package. M cycles between 16383 and 65535 in 16k steps. i.e. 1 to 4 RAM sockets. This must be set up correctly otherwise the system will attempt to write into sockets which are not present, which will corrupt your design.

V Sets the Via pad shape/size. See Appendix B for list of the pads that can be used.

After all the defaults are set up correctly type S to Save the defaults to your program disc. The PCB package will now boot-up with these new settings.

1-22 Memory Left (Garbage search)

Using this facility has 2 functions. Firstly as you would expect, the number of bytes free for your board file is displayed on the screen. Secondly you have the option to perform a garbage search on the board file in sideways RAM, to remove any 'holes'. This is necessary as the board designer does not shuffle up the board file every time you delete an item off the screen, it leaves empty gaps which can be reused after a garbage search has taken place. The new amount of memory available for use will be displayed after the search has ended.

1-23 OS command

Allows you to enter most O.S. commands without leaving the package.
CAUTION: Do not backup, copy or format discs from within the program.

The Other Programs in the Package

1-24 The Board Designer.

This is the part of the package that creates the design of the printed circuit board. It is the heart of the package and it incorporates such features as the PCB outline design, component placement, track routing, silk-screen text and copper text. The component list and netlist files are used by this package to guide you through component placement and connecting tracks.

The PCB details created by this program stay in the computer's memory while you use other parts of the package and the file created is a complete description of the Printed Circuit Board.

1-25 The Component Designer.

The component designer software supports the creation of new component outlines and pins (pads) in the event that the component library supplied does not cover your own parts adequately.

Each component includes:

(a) The component name (sometimes also referred to as the description)

(b) The component footprint, which is the physical outline of the component as seen from the component side of the PCB.

(c) The component pad layout, which is the shape and size of the solder pads of the component and the numerical order of them.

1-26 The Netlist Editor.

The Netlist Editor allows the creation of a "list of connections", between the components in the design. While looking at the circuit diagram it is relatively easy for the design engineer to specify the connections between components, each group of components that have electrically indentical connections being labled as a "node".

Later, when the Netlist is loaded into the PCB design, the components will all be automatically connected together by straight lines forming a good representation of the tracking density at various points on the PCB and allowing the designer the chance to rotate or move components until the "ratsnest" indicates that a more convenient and easy track layout will be achieved.

This method allows the design engineer to test the netlist node against the components in the design, before routing begins. It also makes it less likely that a connection will be forgotten, as might happen if all the connections had to be thought of whilst the PCB was being routed.

1-27 The Component List Editor.

The component list editor is provided to allow the design engineer to produce a component list in the correct format for the package.

The component list relates the component reference number e.g. R1, C4, U7 to the shape of the part in the component library. This shape contains other important information, such as the pad positions, pad sizes and drilling information.

1-28 The Plotter Output Generator.

The purpose of the plotter Artwork Generator is to convert the drawing file into a series of commands that your wet-ink plotter can understand, in order that hard-copy artworking may be obtained from the package.

Most types of plotter are catered for as we have used the most basic plotter commands. An appendix gives details of the commands used, should you need to modify the driver. One type of plotter not catered for is the type using BBC VDU codes.

1-29 Dot Matrix Output Generator.

The Printer artwork generator has been provided to allow PCB's to be satisfactorily produced when a plotter is not available.

The printer has to be capable of quad-density graphics and the program has been pre-set to suit Epson style codes, although the printer codes may be altered to suit other quad-density printers.

To produce professional quality plots a wet-ink plotter is obviously the best output device, but the dot matrix artwork generator provided with this package produces a dramatically smooth and high quality output, all be it a rather slow process.

1-30 The External Applications Program.

This menu option is provided to enable further software applications to be run from within the framework of the present PCB suite.

Possible applications are file converters for word processor generated netlists and component lists, netlist generation direct from circuit diagrams and Autorouting of track layouts.

1-31 PCB Design Procedure

1-32 Methods Of Drawing A PCB

There are two main ways of creating a PCB within the program. The fastest method for smaller PCB's is called the "Manual" or "On The Fly" method. For more complicated designs it is better to use all the features of the program to the full, since this will reduce the time taken to produce the PCB and substantially reduce the risk of making mistakes. This is called the "Automatic" method (although human input is still required for part of the design procedure!).

1-33 Manual Input

In the manual method of PCB creation the designer ignores the Netlist Editor and Component List Editor and goes straight into the Board Designer part of the package. By studying the circuit diagram and knowing what components to use, the designer may enter component footprints directly into the PCB design. The Component Library reference pages at the rear of this manual may be used to determine which components to select. Tracks may be laid down as the component placement proceeds, or this may be left until later, in either case they may be considered as a final placing, or merely as an indication of connectivity. Once the connection is made between components the program knows about the link and will maintain the connectivity no matter how the component, or track connection, may be moved at a later time. The manual user may then employ all the features of the Designer program to complete the design and then use the Artwork Generator program to produce full plots of the design.

1-34 Use Of The Full Package Features (Automatic Input)

Refer to the diagram labeled "PCB Design Procedure".

Circuit Diagram

The first stage of a PCB design is to obtain the circuit diagram. (This program may also be used to draw circuits, but no library components have been supplied for circuit diagram work.)

Bill Of Materials

Along with the circuit diagram, there will inevitably be a list of components and the first stage of PCB design begins from this list.

Component List

Using the Components List Editor the designer creates a list of Library parts that he wishes the package to use to represent the real components in the design. These library parts contain the shape of the component (footprint) and the size and position of the solder pads.

Design Components

If the library does not contain the exact shape of the component for one or more of the components in the design, then the user may decide to employ the Component Designer to create a new library part(s) to suit.

Test The Component List

The component list may now be tested for syntax and to check that all component parts called up actually exist in the library.

SAVE The Component To Disc

The component list is now saved to disc for reference and use in the Board Designer.

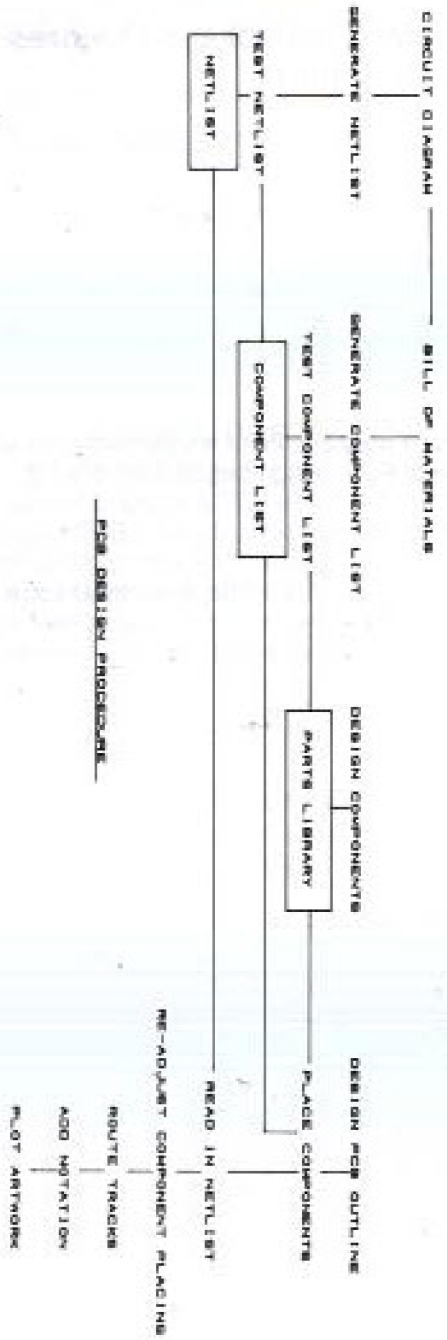

Design The PCB Outline

The next stage is to enter the Board Designer program and to design the outline of the PCB. This can in fact be left until later when it is known how much space the components take up.

Place The Components

The components are now placed into the design. Using the automatic entry they may be placed rapidly and at the same time their reference numbers may also be placed. An experienced PCB designer will get a good placing of components straight away, but it is not at all important to get a good placing at this stage. It is only enough that the components be placed in the design area and separated from each other.

Generate The Netlist

The next stage is to look at the circuit diagram and using the Netlist Editor program, generate a Netlist for the circuit. The Netlist describes every connection between component terminals in the design.

Test The Netlist

If the components have been added to the design in Board Designer, the netlist may now be tested against this to ensure that all components mentioned in the Netlist have actually been placed in the design. The netlist is also tested for syntax and other obvious errors.

SAVE The Netlist

The netlist is now saved to disc ready for use in the Board Designer program.

Read In The Netlist

The main part of the PCB design now starts by reading in the netlist from disc (in the main menu mode). Now when you enter the Board Designer again the components are seen to be all connected up with white lines criss-crossing each other at all angles. This is called a ratsnest. Although this mess seems almost impossible to follow, it shows quite clearly which components need moving to better positions, or rotating, to ease a potential connection difficulty. The ratsnest display can be turned off while moving components, to ease the congested view.

Readjust Component Placing

Even the most experienced PCB designer will not place every component in the ideal position and using the ratsnest as a guide the components are now moved into their final (or near final) position on the PCB.

Route Tracks

Using the RNEST command each ratsnested connection is automatically presented in turn to the designer so that he can route along the most obvious path available. The designer may change sides of the PCB as many times as is necessary and vias will be added automatically at each change. The size of the track will have been specified in the netlist, but if desired the size may be altered while laying down the track. If the shape of a particular route is to be repeated (as in memory bussing situations) the first track shape may be memorised and used over again for each section. Automatic snap connections to the pads make routing easy and error free.

If the components are moved after being routed the program will automatically re-ratsnest those routes which are affected by the move.

Add Notation

The component references may have been added at the time the components were placed, but they may be tidied up now and further details added if desired. Text may be placed in copper, or as a silk screen, or both.

Plot The Artwork

This is the stage where you get to see the results of all your work. The program has outputs to suit wet ink plotters and also dot matrix printers with quad density printing facilities (Epson LX80 compatible).

CHAPTER 2
COMPONENT DESIGNER

2-1 Introduction

The component designer software supports the creation of new component outlines and pins (pads) in the event that the component library supplied does not cover your own parts adequately.

Each component includes:

(a) The component name (sometimes also referred to as the description)
(b) The component footprint, which is the physical outline of the component as seen from the component side of the PCB.
(c) The component pad layout, which is the shape and size of the solder pads of the component and the numerical order of them.

The component file is a sequence of moves and pad placements and should be thought of as a linked sequence of commands. The component designer then acts rather like a word processor on these instructions.

2-2 Component Name

The component name is decided by yourself and assigned to the component description as it is saved to disc file. When this name is used in the Netlist or PCB design, the program will search the disc file and retreive the component information (b and c above).

You may use any six (max) character name you desire eg. IC7400, BC108, 100K, 47nF etc. but if you design very many components like this your library will grow excessively large and will not fit on the disc anymore.

2-3 Duality Of Names

Many components have identical outines and a more sensible approach is to use general names like: DIL14, TO18, RES50, C1A50 and this style of classification is described in the appendix C. Naturally a mixture of these ideas may be profitably used...the choice is yours!

2-4 Component Footprint

The component footprint is the plan-view shape of the component as seen from the top, or component side, of the PCB. It is the shape that is plotted on the silk-screen artwork. The component footprint is constructed by arranging a series of lines of varying length so as to form the outline of the component as viewed from the topside of the PCB. Each section of line is an "element" in the design and contains information on whether the line is visible or not (a draw or a move) and the direction in which it is to be drawn.

2-5 Solder Pads

In a similar manner to the footprint, the position of the pads and the shape of each pad is contained in a series of "elements" that in total form the component description.

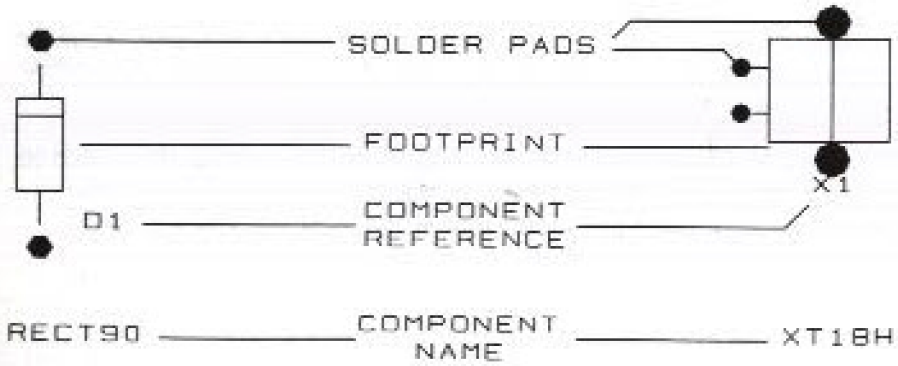

DESCRIPTION OF MENU COMMANDS

There are two sub-menus for the component designer, the executive menu and the edit menu.

2-6 THE EXECUTIVE MENU (Component designer)

The following functions are to be found on the executive menu:

L	Load Component.	E	Edit Component.
S	Save Component.	X	Erase Component.
P	List Components.	C	Change All Pads.
N	List Pad Numbers.	ESC	Exit program.

2-7 Command Control Keys

These commands, which are described below, are activated by pressing the appropriate key on the keyboard. Be sure that the Caps-Lock on the computer is turned ON.

2-8 Load Component

This allows the existing library components to be loaded into the designer in order that they may be modified or inspected. You will be prompted for the component description and then a search will be made for the component in the disc library.

2-9 Save Component

This command saves the current component description on to the end of the disc file (SHAPE) and updates the index (LIBINDX). For information about the file format, see "Description of File" below.

2-10 New Component

If the component is a new design then type NEW in response to the prompt. The program will then ask for the component description (name) and this must be a unique, unused six character name. See the Appendix C for the suggested rules for giving names to component descriptions.

2-11 Altered Component Or Name

If you wish to save the current component by overwriting one already in the file then after issuing the S command, enter the old name of the component. You will be prompted to enter a new component description (name) and you may enter the old name to save the component or give a new name which will save the current component over the old component in file and alter the old name to the new name at the same time.

2-12 List Components

Using this command enables you to list all the components on file to the printer or screen. The CTRL B and CTRL N commands will be accepted allowing the printer to be used and/or the paged mode to be used. CTRL C and CTRL O respectively turn them off. Ignore the "Invalid Selection" messages.

2-13 List Pad Numbers

This command lists the solder pad sizes used on the current design in memory. Pad size 4, which is a round 0.050" pad, is used for most standard parts in the library supplied but these can be changed either individually in the component designer or when using the component in the board designer.

2-14 Edit Component (Design A Component From New)

This command is the entry route into the edit menu where components may be edited or designed, see the Edit Menu below.

2-15 Erase A Component

Use this command to erase a component from memory. To erase one from the disc file you must write over the unwanted component using SAVE as described above.

2-16 Change All Pads

Use this command to change all the pads in the current layout to a new pad number.

2-17 Exit Program

Use ESC to return to the main menu when you have finished designing components.

2-18 THE EDIT MENU

The following functions are to be found on the component edit menu:

T	Position Start.	F	Footprint/Pad.
P	Place Pad.	S	Surface/Normal.
1-8	Move (Draw).	M	Move/Draw.
R	Change Direction.	D	Delete Element.
N	New Pad Shape.	B	Back To Menu.

In addition the following information panel is displayed below the menu:

Pad:4	Direction:^	Pin:1	Left:121

2-19 INFORMATION PANEL

2-20 Pad

This shows the pad number which will be used to define the next solder pad to be placed in the design. It is changed using the New Pad Shape command, see below.

2-21 Direction

The arrow head indicates the direction that the cursor will move when using the Move or Draw commands, see below.

2-22 Pin

This indicates the next available device pin number. The display updates automatically to the next number whenever a pad is placed into the design.

2-23 Identification Of Pin Numbers

The pin number is used in the Netlist for ensuring that the correct pins are connected together. When designing a component it is therefore very important to place down the pads of the component in the numerical order of pin numbers.

It is also advisable to shape the footprint so as to indicate pin 1 of the device. The view is from the top of the component looking through the component to the pins.

2-24 Left

The display shows the number of elements left available for the design of the component. On unusually large components it may be necessary to design the pads using one name and the footprint using another. Be sure to include one blank pad (pad No. 0) in the footprint otherwise the footprint cannot never be erased.

COMMANDS

2-25 Position Start

Use the T command to place the cursor in a convenient starting position on the screen. This has no effect on the positioning of the component in the Board designer, pin 1 being the control point on the component. You may use the T command to move the component in any direction, even over the menu or partially off the screen in order to design a large enough component for your needs. Each unit of movement is 0.025".

The T command may be used at any time in the design, not merely at the start of creation.

2-26 Footprint/Pad

The F key will toggle the display to change the designer from footprint design mode to pad design mode and vice versa. It is usually better to place pads first then to draw the footprint around them. After using this command the cursor will return to the last position used in the other drawing mode.

2-27 Place Pad

The P key causes a pad to be placed at the cursor position. The type of pad to be placed is shown against the PAD display in the menu box. see New Pad Shape command below for a description of the pads available.

2-28 Pin Number Of Pads

The pin number assigned to any pad position is shown in the information panel as described above. It is important to remember that the Netlist will use these pin numbers to describe which pins are to be linked together by tracks in the PCB design. Thus where a component is polarised the pads should be placed in a particular order, so that the correct pin number is associated with the relevant pad.

Sometimes you will want to place pads purely to create component mounting holes. Change the pad shape - see below in order that the drilling details will be meaningful. Also, do these pads last, so that the solder pads are numbered correctly for the component.

2-29 Surface/Normal

In the Surface Mounted mode the footprint is associated to the same side of the board as the pads, rather that the opposite side of the PCB as is the case with normal components. All components are saved to the library disc with only one set of pads associated with them, i.e. for only one side of the board. If pads are required on both sides of the board then they are defined as such, when they are placed in the board designer program using the BOTHS command. The actual side of the PCB that the components is placed on is also determined in the board designer.

2-30 Viewing Direction Of Components

The components are all viewed from the top side of the PCB, in plan view, as per normal PCB convention. When assigning the pin numbers make sure you number the pins correctly as sometimes component manufacturers supply drawings showing "the pin view" i.e. the view from underneath the component.

2-31 Components Intended For Bottom Mounting

The normal side for PCB components is the top side i.e. the nearest side of the PCB when viewing the design on the screen. If polarised components are intended for use on the bottom side of the PCB, then that fact must be taken into account when designing the component footprint and placing the pads. The golden rule when designing components is that ALL components are viewed from the TOP side of the PCB. If a component is mounted on the bottom of the PCB then its pin view will be uppermost. i.e. in reverse to that when mounted on the top of the PCB.

2-32 1-8 Move (Draw)

This is the command that causes the actual cursor movement. Every command issued is a stored element in the component design.

Each press of the number keys 1 to 8 will cause the cursor to move a corresponding amount in units of 0.025". When in the footprint mode you may either draw or move (see below), in the pad mode only movement is used.

Key1 = 0.025"	Key5 = 0.125"
Key2 = 0.050"	Key6 = 0.150"
Key3 = 0.075"	Key7 = 0.175"
Key4 = 0.100"	Key8 = 0.200"

When drawing you will see a small hole shown at each section of line. This is useful for counting units or seeing how the component was designed. The hole is not shown in the main PCB designer program.

2-33 Move/Draw

This toggle allows movement to take place with or without drawing. In the MOVE mode the cursor will be moved (using the number keys, see above) without causing any lines to be produced. In the DRAW mode each cursor movement will be accompanied by a corresponding length of line being drawn. You cannot draw lines in the pad layout mode.

2-34 Change Direction

The R command rotates the direction of drawing or moving by 90 degrees. The direction of drawing is indicated in the information panel. Curved or angular lines may be created using a combination of the R and Draw commands. Under some circumstances you will not be able to see the curve shape since each "element" will be a "hole" as described above under (DRAW).

2-35 Delete Element

The D command erases the last element entered into the PAD or FOOTPRINT part of the component file. Succesive presses of the D key will gradually erase all of that part of the component description. The pads part of the file is separate from the footprint part and so a FOOTPRINT/PAD command will enable the pads to be modified without changing the footprint, and vice versa. The DELETE key may also be used if prefered.

2-36 New Pad Shape

The N command allows the option to change the solder pad description as the design progresses. There are over 120 different designs of solder pad to choose from and you will find a full description of them in appendix B.

There are no restrictions upon the number of different pads used in any one component description. If you wished you could design a component with many different pads!

All pads used in the design are represented by the same + symbol. You may observe which pads are in use by listing the pad numbers in the executive menu mode.

Most components in the library are designed with pad size 4. This is a round pad 0.040" in diameter and suitable for some general applications. You may change the pad sizes of any of the components in the library by loading, changing the pad size using Change All Pads in the executive menu and saving again.

The pad sizes of any component may also be very easily changed while using the component in the board designer.

2-37 Back To Menu

This command allows access back to the executive menu. The two modes may be used without losing the component design but if you wish to keep the design you must save the component before ESCaping back to the main program.

CHAPTER 3
COMPONENT LIST EDITOR

3-1 Introduction

The component list editor is provided to allow the design engineer to produce a component list in the correct format for the package.

The component list relates the component reference number e.g. R1, C4, U7 to the shape of the part in the component library. This shape contains other important information, such as the pad positions, pad sizes and drilling information.

By creating a component list the designer allows the possibility of automatically bringing the component shape in the design and helps to ensure that no component is forgotten to be included. The completed component list may also be tested against the library before the PCB design proper is started, thus avoiding a temporary halt in the design procedure while a new component is created in the component generator.

Any component shape in the library may be used as many times as desired, even for entirely different components e.g. the rectangular outline defined by library reference RES40 could equally well be used for a resistor or for a capacitor.

3-2 The Component List Editor Menu

The following functions are to be found of the Component List Editor Menu.

L	Load file	A	Add line to end
S	Save file	I	Insert line
T	Test file	D	Delete line
P	Print file	X	Erase file
F	List file	ESC	Exit program

3-3 Load File

This command allows previously existing component lists to be loaded in ready for editing. You will be asked to enter the filename of the component list. This is stored on the disc under the C directory, but you will not need to specify the prefix whilst you are in the component list editor, merely type the filename and RETURN.

3-4 Save File

Used to save the component list file to disc. You will be asked to give a file name of your choice, up to 6 digits long, note that no checking is made to see whether a current file already exists with this name and so, unless you wish to overwrite a file, you must be careful to use a unique name. However, since all the different parts of the program store their files in separate directories, you may use the same name for all files e.g. AMPFR. Ideally you should use a fresh disc containing all the files to be generated within a PCB design. This will prevent any accidental reuse of file names and at the same time, ensure that the valid library is stored with the design.

3-5 Aborting The Save

If you accidentally operate the SAVE command you may abort the save by not giving a file name, when asked. i.e. just press RETURN.

3-6 Test File

This function will test the component list in memory for syntax and logical errors. The component library will be scanned to ensure that the specified component shapes can be found. Some syntax errors will be checked as the line is entered and may be corrected immediately. Any errors that remain and are shown up by this test will need to be corrected using the delete and insert commands described below. However, component shapes that are missing from the library may be added to the library at a later date, using the component designer program.

3-7 Print File

Prints the component list out to a printer. OS commands such as selecting serial or parallel printers may be made from the main menu, but be sure to save your file before either printing or escaping from this program. You may enter a title as requested for the listing or press RETURN to abort the Print File command.

3-8 List File

This command lists the component list to the screen. You will be offered the chance to start the list from any place in the file and the SPACE key is used to stop/start the scrolling of the list. To abort the listing press RETURN.

3-9 Add Line To End

This is both the entry and editor command. The next available component line number will be printed on the screen ready for you to enter the component reference number followed by the component shape reference. Only one component per line is recognised.

The format of the line is important and is as follows:

component reference number, space, component name.

Example:

1 R1 RES50
2 U1 D1L14

Would mean that the component R1, would be using the shape RES50 in the component library. Component U1 would be using the shape DIL14.

To leave this part of the editor type a RETURN in an empty line.

3-10 Insert A Line

This allows a line to be inserted at any place in the list. While it is not essential that the component list be constructed in any logical order, it may be useful asthetically to have the printout in a sensible order.

You will be asked to enter the line number you wish to insert, thus if you wished to enter a line between lines 1 and 2 one would enter 2 to this request. The old line 2 would become line 3, etc.

3-11 Delete A Line

You will be asked to enter the line number for deletion, upon pressing RETURN that line will be deleted and all subsequent lines will be renumbered.

3-12 Erase A File

The program will not allow you to load in a new component list while a list is currently in memory, hence this command must be used to delete the current file should you wish to load a new component list. You will be asked to confirm the deletion.

CHAPTER 4
NETLIST EDITOR

4-1 Introduction

The Netlist Editor allows the creation of a "list of connections", between the components in the design. While looking at the circuit diagram it is relatively easy for the design engineer to specify the connections between components, each group of components that have electrically indentical connections being labled as a "node". Also the designer should know which tracks are required to be thick and which may be thin and so the netlist may also specify the track thickness to be used at various points in the design.

Later, when the Netlist is loaded into the PCB design, the components will all be ratsnestedly connected together forming a good representation of the tracking density at various points on the PCB and allowing the designer the chance to rotate or move components until the "ratsnest" indicates that a more convenient and easy track layout will be achieved.

This method allows the design engineer to test the netlist nodes against the components in the design, before routing begins. It also makes it less likely that a connection will be forgotten, something that might happen if all the connections had to be thought of whilst the PCB was being routed.

4-2 The Netlist Editor Menu

The following functions are to be found in the Netlist Editor Menu.

L	Load file	A	Add line to end
S	Save file	I	Insert line
T	Test file	D	Delete line
P	Print file	X	Erase file
F	List file	ESC	Exit program

4-3 Load File

This command allows previously existing netlists to be loaded in ready for editing. You will be asked to enter the filename of the netlist. This is stored on the disc under the N directory, but you will not need to specify the prefix whilst you are in the netlist editor, merely type the file name then RETURN.

4-4 Save File

Used to save the netlist file to disc. You will be asked to give a file name of your choice, up to 6 digits long, note that no checking is made to see whether a current file already exists with this name and so you must be careful to use a unique name, unless you wish to overwrite the old file. However, since all the different parts of the program store files in separate directories you may use the same name for all files e.g. FILTER. Ideally you should use a fresh disc containing all the files to be generated within a PCB design. This will prevent any accidental reuse of file names, and ensure that chronologically valid files are stored on the same disc as the design.

If you accidentally operate the SAVE command you may abort the save by not giving a file name at all and just pressing RETURN.

4-5 Test File

This function will test the netlist in memory for syntax and logical errors. A full test cannot be successfully carried out until a component list has been created, using the component list editor. The component list would normally be created first, in order that the component reference number is already assigned at the time the netlist is created.

Some syntax errors will be checked as the line is entered and may be corrected immediately. Those that remain and are shown up by this test will need to be corrected using the delete and insert commands described below.

4-6 Print File

Prints the netlist out to a printer. OS commands such as selecting serial or parallel printers may be made from the main menu, but be sure to save your file before either printing or escaping from this program. You may enter a title for the listing as requested. Pressing RETURN at this stage or during printing aborts the Print File command.

4-7 List File

This command lists the netlist to the screen. You will be offered the chance to start the netlist from any place in the file and the SPACE key may be used to stop/start the netlist. RETURN aborts listing.

4-8 Add Line To End

This is the entry and also the editor command. The next available netlist (node) number will be printed on the screen ready for you to enter the line of connections.

The format of the line is important and is as follows:
component reference number, space, component pin number, space,
component reference number, space, component pin number,
and so on until all the connections at this node have been described.

Example:

1 R1 1 R2 1 C4 2

Would describe three components, R1, R2, and C4 with one end of each component connected together.

4 R1 2 U1 3

Would describe the other end of R1 connected to pin 3 of an integrated circuit, U1.

4-9 Finishing A Node Line

The RETURN at the end of a line signifies the end of all the connections at that node and thus should not be used until all the components that are connected by the same node are typed in. However, the keyboard buffer will accept about 240 characters and if the line needs to be longer than this then you may terminate it at a sensible point and continue the description of the connections on the next netlist line number. One of the previous component pins will have to be described again to start the new line. If you do this a warning will appear when you test the file saying two nets are joined. This should be ignored.

To leave this part of the editor type a RETURN in an empty line.

4-10 Insert A Line

This allows a line to be inserted at any place in the netlist. While it is not essential that the netlist be constructed in any logical order, it may be useful asthetically to have the printout in a sensible order, and when used in the Board Designer Program it may be helpful to have the connections called up in a particular order. The insert command allows you to do this.

You will be asked to enter the line number you wish to insert, thus if you wished to enter a line between lines 1 and 2 one would enter 2 to this request. The old line 2 would become line 3, etc.

4-11 Delete A Line

You will be asked to enter the line number for deletion, upon pressing RETURN that line will be deleted.

4-12 Erase A File

The program will not allow you to load in a new netlist while a netlist is currently in memory, hence this command must be used to delete the current file should you wish to load a new netlist. You will be asked to confirm the deletion.

4-13 Track Thickness

The thickness of a track may be specified in the netlist, giving the designer the opportunity to define special tracks (such as power rails) at a time in the design procedure when he is thinking about the particular connection and its electrical significance, rather than when he is concerned with other PCB related matters.

Five thicknesses are allowed, coded by the following numbers:-

@0..... 0.015 inch
@1..... 0.025 inch
@2..... 0.035 inch
@3..... 0.050 inch
@4..... 0.080 inch

The code is placed at the beginning of a node description.

Example:-

4 @1 R1 2 U1 3

Would describe one end of R1 connected to pin 3 of U1 by a track of 0.025 inch thickness.

If the code is left out at the beginning of a line (as is quite normal) the default value of 0.015 inch is assumed for that node.

CHAPTER 5
THE BOARD DESIGNER

5-1 Introduction

This is the part of the package that creates the design of the printed circuit board. It is the heart of the package and it incorporates such features as the PCB outline design, component placement, track routing, silk-screen text and copper text. The component list and netlist files are used by this package to guide you through component placement and connecting tracks.

5-2 The Menu

Brief description of menu functions - see individual operations for detailed descriptions.

MOVE	Move components, tracks, areas, board, F words, B words, fingers.
ERASE	Erase components, tracks, fingers, copper, F words, B words, board, pads, Rnest.
TRACK	Routes tracks on either side of PCB and creates vias where necessary.
COMPO	Obtains and places components into the design
FINGR	Specifies and places copper fingers used for PCB edge connectors.
COPPR	Generates and places areas of copper on the PCB.
BWORD	Generates and places text to be placed in copper on the PCB.
FWORD	Generates and places text to be used in the silk-screen plots.
AREA	Specifies area of PCB for moving components.
BOARD	Generates the PCB board outline.
PAD	Allows the pad(s) of any component to be modified.
RNEST	Allows ratnest to be turned into true routes.

5-3 The Message Panel

At the top of the screen is a message panel (blue area) which the program uses to communicate with the user. Many of the functions described below will start, or end, with a message and when an answer is required the cursor action will be suspended as an indication that a keyboard answer is requested. The message panel is also used as a warning message area. When used in this manner a beep will be sounded, usually the message is easily related to the circumstances at the time, but a list of Error Trapping Messages with more information is given in the Appendix E.

The red message panel located at the bottom of the blue area is used, when appropriate, to describe the track under construction or being edited.

5-4 Description Of The Lower Menu Panel

The lower half of the menu panel contains a number of general information and control features. In general these are commands that are normally on rather than off and hence they are white words rather than black as in the top half of the menu.

All these commands may be used at any time during the use of the various menu functions, except when the mouse/trackerball cursor is not shown. If the screen needs to be redrawn this will occur when the cursor is moved off the menu again.

45DEG	Allows any angle or only 45 degree angles (on lines) to be entered.
LCK	Changes the (invisable) grid-lock to either 1 (0.025"), 2 (0.050") or 4 (0.100")
INCHG	Turns on and off the Inch Grid display.
BOTHS	Turns on and off the facility to place pads on Both Sides of the PCB at once.
RN 15	LHS - highlights the tracks of a selected size or only the ratsnested tracks. RHS - shows the size of the tracks to be plotted.

FT F	LHS - turns on and off the footprint and/or track display on the topside of the PCB. RHS - shows whether footprints or tracks will be placed on the top side of the PCB.
FT T	LHS - turns on and off the footprint and/or track display on the bottomside of the PCB. RHS - shows whether footprints or tracks will be placed on the bottom side of PCB.
SC 1	Adjusts the scale with which the screen display will be drawn. Adjustment, even to the same value, causes a screen re-draw.
00000	X position of cursor. Also the left-hand screen position when the cursor is on the menu.
00000	Y position of cursor. Also the top screen position when the cursor is on the menu.
^ v	Adjusts the screen Y position.
< >	Adjusts the screen X position.

Reminder Of Pointing Device Control Functions

The Board Designer part of the package requires the use of a trackerball or mouse connected to the USER PORT and is designed for use with a three-button device. However, the TAB, SPACE and RETURN keys on the keyboard replicate the 3 buttons on the pointing device and so two button devices may also be used. The following table shows the intended functions of the buttons/keys.

BUTTON	KEY	FUNCTION
LEFT BUTTON	TAB	Change side of PCB
CENTRE BUTTON	SPACE	Select Action, Start Action, Continue Action (Corners etc.) Finish Action (Two Point Actions)
RIGHT BUTTON	RETURN	Finish Action (Multipoint Actions) Rotate Components Orientation of Text

The above function descriptions will be used in the following text to indicate which key or button you should push. e.g. "Select" will be used to indicate use of the centre button or space bar.

5-5 MENU ITEMS DESCRIBED

MOVE COMMAND

5-6 Move Component

Select MOVE and COMPO together. Now use the trackerball or mouse to pick up the individual component in the design. When picking up the component place the cursor near, or on, the origin of the component, which is usually pin 1, although other pins work too. Now move the component to the desired new position. The component may be rotated while moving. Any FOOTPRINT WORD associated with the component will also move with the component, but you will have to wait until the screen is re-drawn to see this.

If the component has already been routed then moving it will cause the tracks to be re-ratnested. The ratnest connections will be seen after the screen is redrawn.

5-7 Move Track

This option is a one-off version of RNEST and allows routing of a connection without losing connectivity. It differs from RNEST in that menu control is passed back to the user immediately the track is fully routed. The options here can be somewhat complicated to understand, please read carefully. This command is basically a reroute track, rather than a move.

Select MOVE and TRACK together. Now use the pointing device to select two corners or ends of the track to be moved. It does not matter which order of points you choose so long as they define a unique track. Also, you do not have to locate exactly the corner or end of the track as the program will try to find the track nearby. If the track may be unambiguously identified by one point you may press the "select" button twice on the same point of the track. You must be working on the same side of the PCB as

the track is routed. Once selected the red message panel will show details of the track selected.

Note that no vias will be picked up by Move Track. Once a track is placed vias are considered as components. The track picked up will be a part which is on one side of the board only.

At this moment the first point of the first section of track in the route will be connected (rubber-banded) to the cursor and if desired you may insert another corner by moving the cursor to the desired point and SELECTING that point. Alternatively you may advance to another section of the track by using the keyboard arrow keys > and <, where upon you may then alter the route of that section.

If there are too many sections of track, then see removing sections below. After altering the route to new positions you may finish the MOVE function by pressing the finish key. The whole route will be re-tracked. Any of the normal error trapping messages may be displayed, see Appendix E for a full description.

You may change the side of the PCB while conducting the above operations if desired, and via's will automatically be inserted.

You may also change the side of the whole track by deleting the first point, changing side of board and then replacing this point.

Note that the size of the track selected will be dispayed on the lower menu panel and this may be changed whilst in the MOVE TRACK mode. The whole route of the track will be changed in size.

5-8 Cutting The Track Route

If desired, it is possible to cut a section of track while in the MOVE TRACK function. Proceed as above and use the keyboard arrow keys to move to the end of the track route you wish to cut out (last point). Now press the DELETE key on the keyboard. The last section of track before the point selected will be removed from the design. BE CAREFUL: the ratsnest connectivity may now have been destroyed.....make certain that you subsequently re-connect these points with track.

Other keyboard commands S,R,B,N,U and A are available for manipulating existing tracks, of particular interest to the cutting of tracks are N and U.

S Save The Route Completes the tracking of the route and saves the route information to a special area of memory for later recall.

R Recall The Route After picking up a new start point, pressing the R command will recall the saved route (see above) and place the identical route shape for the new start point. This is ideal for memory bussing.

B Recall Backwards The same as above except that the saved routing will be recalled in such a way that the new start point will be at the END of the recalled routing.

N Re-ratsnests The Route Leaving all the route corner information intact.

U Unroute A Track Simplifies a track to two points, beginning and end, by removing all the corners.

A Aborts The Command Replaces the current route ratsnested, and then aborts the command entirely, returning you to menu control.

5-9 Removing Sections of Track

Whilst editing or placing track routes it is possible to generate several sections of track where only one straight track needs to be. These can be seen as "stopping" points when using the arrow keys as described above. To remove these short sections of track or indeed to remove any section not at the end of the route, follow the description for cutting a route as above, but use the DELETE key before reaching the last point in the route. Note that the delete functions by removing corners, not sections, of tracks.

5-10 Move Area Of Components

The Move Area command works independently on each side of the PCB so if you wish to move an area that contains items on both side, then you will have to perform the move area command twice. Once for the top, once for the bottom. Be sure to use exactly the same co-ordinates for both moves.

Normally you will have placed components on only one side of the PCB, so only the normal (blue cursor) selection will be needed.

Tracks and footprint words associated to the component will also be moved. If a track has only one end connected to any of the components which are moved then that end is adjusted and the track is left ratsnested. If both ends are connected then the whole track is rerouted. Select MOVE and AREA and change the cursor to the side of PCB desired, and then, using the select button, outline the area to be moved. Take careful note of the two co-ordinates. (setting the gridlock to 4 helps here) Move the boxed area and take a note of the co-ordinates when finished (use the select key again). If required, change the cursor to the other side of the PCB and repeat the operation using the same co-ordinates.

Now re-route any ratsnested tracks as desired. Under these circumstances any ratsnested tracks are not true ratnests and the program may retain part of the original routing, giving rise to non-45 degree error messages. If so, the best way to re-route is to find all the sections using the arrow keys, then delete all the old route using DELETE or keyboard command "U" as described under "5-8 cutting the track route", before re-routing from the start. Connectivity will be maintained if you retain the first and last sections and use of the red message panel will help here. The "U" command automatically maintains connectivity.

5-11 Move Board

This command works in a similar manner to MOVE TRACK. It is provided to allow for modification of the shape of the PCB outline after the design has started. If the whole PCB board is to be moved, use the MOVE AREA command, otherwise follow the instructions for MOVE TRACK.

5-12 Move Footprint Words

The FWORDS are related to a component and so if a component is moved the associated word will move with it. This command moves the word in relation to the component. The word may be rotated so that it is written horizontally or vertically and also may be moved to the other side of the PCB.

Select both MOVE and FWORD together then pick up the word by selecting on, or near, the first letter of the word. Move the word to the new position and finish the action with a second "select" command. Normally, footprint words are placed on the top side of the PCB, i.e. in red, but they can also be placed on the other side and if so, then the cursor has to be on the other side to be able to pick them up for movement.

5-13 Move Board Words

Select the cursor to be the same colour (PCB-side) as the BWORD and select MOVE and BWORD together. Now use the cursor and "select" the word. Move the word to the new position and press "select" again to finish. Both the side of the PCB and the orientation of the word may be altered during the move.

5-14 Move Fingers

Select MOVE and FINGR together and ensure that the cursor is on the same side of the PCB as the finger connector. Now use the cursor and "select" the connector (usually bottom left point). Move the connector to the new position and press "select" again to finish the command. Often finger connectors are on both sides of the PCB, if so you will need to move both parts separately.

Rotate may be used while moving and the side of the PCB may be changed also.

ERASE COMMAND

5-15 Erase Component (or via)

Select ERASE and COMPO together. If you have components with single-sided pads, select the correct side of the PCB to work on. Now place the cursor over or near a pad on the component and press "select". The component will be erased from the design.

WARNING: Once a component has been erased the connectivity will have been destroyed and so any tracks that were connected to the erased component will become ratsnested to show that they are not routed. (This will be seen when the screen is redrawn.) You should also ERASE the section of track(s) from the design. If you are going to replace the erased component with another of the same component reference e.g. R1, C4, U5 etc, then you need not erase the section of track, but merely re-route it. Use MOVE TRACK.

5-16 Erase Track

Select ERASE and TRACK together. Set the cursor to be the same colour as the track you wish to erase and "select" any two corners, or start points, on the track you wish to erase. On the second "select" the track route will be erased back to the next component or via on the track.

WARNING: Once a track has been erased the connectivity will have been destroyed. Be sure to replace the track should you want the connection to be maintained.

5-17 Erase Finger

Select ERASE and FINGR together. Set the cursor to be the same side of the PCB as the connector you wish to erase and then locate the connection end or origin of one of the fingers and press "select". Note that for double-sided connectors you will need to repeat the operation with the cursor set to the second side of the PCB.

5-18 Erase Copper

Select ERASE and COPPR together. Make sure the cursor is set to the same colour as the area of copper you wish to erase and locate the start point. Press "select" and the copper area will be erased. The start point is the top-left-hand corner.

5-19 Erase Boardword

Select ERASE and BWORD together. Make sure that the cursor is set to the same colour as the word you wish to erase and locate the top left of the first letter in the word. Press "select" and the word will be erased.

5-20 Erase Footprint Word

Select ERASE and FWORD together. Make sure that the cursor is set to the same side of the PCB as the footprint word (usually topside, drawn with the RED cursor) and locate the top left of the first letter in the word. Press "select" and the word will be erased.

5-21 Erase Board

Select ERASE and BOARD together and the PCB outline will be erased after confirming the Y/N message.

5-22 Erase Pad

Select ERASE and PAD together. Make sure that the cursor is set to the same side of the PCB as the pad you wish to erase. Locate the pad and press "select" and the pad will be erased. If the pad is double-sided only one side will be erased and you will now see the remaining side displayed in colour.

Note that if you erase a pad the connection point still remains and it is possible to place the pad again by selecting pad on its own. An erased pad is an empty pad or a pad with a shape value of zero.

WARNING: If you erase a pad, or one side of a via, the track could lose connection if the remaining pad is on the wrong side of the PCB. Check that the remaining pad and tracks are all the same colour.

5-23 Erase RNEST

Select ERASE and RNEST together. You will be given the opportunity to agree (Y or N) with the total deletion of the remaining ratsnest connectivity pattern.

WARNING: If confirmed, remaining ratsnest connection lines will be erased and all knowledge of the unrouted connections will be lost. All routed connections will remain and the connectivity of these is preserved.

NOTE: Once some connections have been made it is inadvisable to re-load the netlist, as this will result in two connections for each existing track.

TRACK COMMAND

5-24 Track

Use the "select" button for starting the track and for every corner in the track. This command places track into the design in a non-ratsnest routing manner. Once placed, however, the track becomes part of a connectivity pattern and would be ratsnested at a later time if, for example, the associated component were moved. See also 5-25 to 5-27 below.

Some keyboard commands S,R,N,U and A are available for manipulating existing tracks.

S Save The Route Completes the tracking of the route and saves the route information to a special area of memory for later recall.

R Recall The Route After picking up a new start point, pressing the R command will recall the saved route (see above) and place the identical route shape for the new start point. This is ideal for memory bussing.

B Backwards Recall The same as above except that the saved routing will be recalled in such a way that the new start point will be at the END of the recalled routing.

N Re-ratsnests The Route Leaving all the route corner information intact.

U Unroute A Track Simplifies a track to two points by removing all the corners.

A Aborts The Command Replaces the current route ratsnested and then aborts the command entirely, returning you to menu control.

5-25 Track Side

The track will be placed on the side of the PCB indicated by the colour of the cursor and the indicator on the lower menu panel. Unless the colour palette has been altered RED tracks will be on the top side of the PCB and BLUE tracks on the bottom.

The track side may be changed at will during the laying of track by selecting the change side button. A via will automatically be placed at the change-over point. A via is treated as a component and may later be moved in the same way as components and so after finishing the particular track containing a via, the track will be split into two tracks one before and one after the via.

5-26 Track Size

The thickness of the track is indicated on the lower menu panel in the right-hand section. If the size is altered while completing a route the whole route, including that beyond vias, will be changed to the new size. To alter a route thickness for only a part of a track route requires you to finish and restart a new track from the finish point. This is easy to do, simply use the "finish" button then without moving the cursor start a new track using "select". Now that the next section of track is started you may move the cursor to change the size on the lower menu panel. Avoid doing this directly in line with a nearby pad, as the "finish" action may try to join the track to the pad. Other than for "necking", it is usual to leave the track size

changing until all routes have been completed, when the MOVE TRACK command may be used to change the size.

5-27 Finish Track

When you come to the end of a route, complete the track by pressing the "finish" button. Note that the cursor need not be exactly on the finish point, but the last section of track must be placed to the pad by the "select" button before using the "finish" command.

This is a little different to the method used in ratsnest placement, since the program does not know where the track is to finish.

COMPO COMMAND

5-28 Component Placement

The COMPO command allows the manual entry of components into the design. The message panel asks for entry by Shape, where components are selected from the library, or Auto, where the entry is from a disc file created in the Component List Editor, or Copy where the previously "shape" entered component may be repeatedly placed down with consecutive component reference numbers.

5-29 Manual Entry From The Library (shape)

After "selecting" COMPO simply type in the library reference for the component(s) desired e.g RES50 followed by RETURN. The message panel will now ask if you want the component reference number, e.g. R1, C5, to be placed at the same time.Then the panel will ask for the component reference number. Enter this number e.g. R6 followed by RETURN and the component will be extracted from the library ready for placement into the design. Use the cursor to place the components at the desired position and press "select". See 5-32 for multiple entry of the same shape.

5-30 Side Of PCB

The component is normally placed on the top side of the PCB with pads on both sides. This creates a conceptional difficulty about what colour the cursor should be for placement. Think about it this way: the "normal" way is for the component to be on the top and the tracks on the bottom. The bottom track colour is BLUE so the cursor should be BLUE for normal placement. The right hand side lower menu panel shows the side of the footprint and tracks currently selected.

5-31 Single Sided Placement

For single-sided PCB's the BOTHS command should be turned off. This will cause the components to be placed with only one set of pads on them. The footprint will either be on the same side as the pads, or the opposite side, depending on whether the component was saved as a surface or normally mounted component respectively, in the component designer program.

5-32 Copy (consecutive entry)

Immediately after a manual entry it is possible to type "COPY" and to continue the same shape at different places in the design. The component reference number will automatically incremented by one, e.g. C5 to C6 for each placement. Type A from the keyboard to Abort this entry mode.

5-33 Auto (entry)

Auto entry will automatically bring onto the board all the components used in your current design. Type AUTO and the message panel will give the usual Y/N request for automatic placement of the component reference number followed by a request for the filename of the component list. (The component list will have been previously created in the component list editor program.) Upon giving this filename the program will read the file and the library automatically allowing rapid and mistake free component entry. Type A to abort this entry mode.

FINGR COMMAND

5-34 Finger Connectors

The FINGR command allows the creation and entry into the design of PCB edge connectors. These have been included in the PCB designer menu to allow a wide option of connectors without complicating the components library file design. The fingers are drawn in outline to save screen re-drawing time, but are, of course, plotted with solid copper.

5-35 Number Of Fingers

After selecting the FINGR command the program asks for the number of fingers, this must be between 1 and 254. The number refers to the number of connector fingers on one side of the PCB only.

5-36 Finger Pitch

This may be one of three sizes, 0.1 inch, 0.15 inch or 0.2 inch. Enter the appropriate size followed by RETURN.

5-37 Finger Length

This refers to the depth of the copper strip forming the fingers, it may be set to any size between 0.025 inch and 1.575 inch in 0.025 inch steps. Enter the size in inches e.g. 1.025 RETURN.

5-38 Double Sided Edge Connectors

If you wish to create a double sided edge connector you will have to create two separate components, one placed on each side of the PCB. Each should be given a separate component reference number, e.g. J1 and J2, so that the netlist may refer specifically to any particular finger.

5-39 Connection Point

The normal point for finger 1 origin and connection point is the left most finger, at the bottom, however rotation may alter this.

5-40 Plating Bar

A plating bar may easily be constructed by connecting track to the outside edge of the fingers and running this to a connection point. The plotter will create a track connection, but if the connector is moved, the plating bar connections will not be ratsnested unless the track is taken through the finger to the origin.

COPPR COMMAND

5-41 Placing Copper Areas

The COPPR command allows rectangular areas of copper to be defined. Although shown on the screen as open rectangles the plotting commands will fill in the areas with solid copper. Use the "select" command for both start and finish of the rectangle.

5-42 Connectivity

Copper areas placed over tracks (or vice versa) will naturally make contact with the track. However, no connectivity is assumed and if tracks or components are subsequently moved the program will not ratsnest the copper area. If blocks of components containing copper areas are moved then the copper areas will need to be replaced separately.

5-43 Side Of PCB

Copper areas may be placed on the Red or Blue side of the PCB in the same way as components.

BWORD COMMAND

5-44 Text Placed In Copper

The BWORD command will provide the useful ability to place text directly onto either PCB surface. This allows for notation of the PCB components or identification of the PCB, even if you are not going to use the silk screen facility.

Even if you intend to silk screen the finished PCB there is a very good reason why you should use copper text on both sides of the PCB surface. When the PCB manufacturer is given the PCB masters, he may easily print the PCB "inside out" by photographing the masters from the wrong side. By placing text on at least one side of the PCB you allow him positive proof of the correct side to use.

5-45 Bottom Side Text

To place text on the solder side of the PCB, select the Blue cursor. Since the screen is looking at the top side, the text will appear in reverse at this time.

5-46 Top Side Text

Use the Red cursor for text that is to be placed on the top side of the PCB (component side). Text on the bottom side of the PCB is shown inversed in the X direction.

5-47 Rotation Of Text

Use the right button to rotate the text through 90 degrees before placing the text with the "select" button. Note that text may only be rotated to two possible configurations.

FWORD COMMAND

5-48 Silk Screen Text And Footprint Related Text

The FWORD command is intended to provide a facility for placing component related information on the top surface of the PCB for creation of the silk screen master. Other information such as the board title and reference number may also be placed down.

5-49 Side Of The PCB

The Red cursor should be used to place the text onto the top (component side) on the PCB. Text may also be placed on the bottom if required where it will be shown reading left to right (unlike BWORD's).

5-50 Relation to the component reference number

When entering the text you will be asked for the component reference number. This is so that the program can move the text at the same time as the component, should the need arise. Please note that the program will automatically place the component reference number (if desired) at the same time as placing the component into the design. See 5-28

You may use the same component reference number to place several items of text if you wish, however if you are placing a non-component related text you should not use a valid component number, but a fictitious reference so that the text is not accidentally moved at a later date. No checking is made on the reference number given.

5-51 Rotation Of Text

Use the right button to rotate the text through 90 degrees before placing the text with the "select" button. Note that text may only be rotated to two possible configurations.

AREA COMMAND

5-52 Area Command

The Area command is selectable on its own (without the move command), but the action is identical with the MOVE AREA command given in 5-10 above.

BOARD COMMAND

5-53 Board Edge (outline)

It is not essential to design a PCB outline, but its provision enables a tidy silk screen or assembly drawing to be produced and assists with the placing of components in the correct position.

The PCB outline is a separate file element and may be plotted, or not, as desired with any of the types of output plots. You can treat the PCB outline as a fifth layer in the design. Notice that the PCB outline may not be turned off in the display menu.

5-54 Size Of PCB Outline

It is possible to draw a PCB outline greater than the 24 inch x 24 inch size permitte in some scales. However, unpredictable results may possibly occur, so avoid designing a PCB larger than 24 inches in either direction.

5-55 File Size Of Outline

The PCB outline is constructed of a series of lines and this series may be made up to 61 elements long.

5-56 Angular Lines And Circle Sections

Normally the PCB outline is restricted to orthagonal lines, or those exactly at 45 degrees. By turning off the 45DEG command on the lower menu panel you may draw any angle line you wish and construct circular and other shapes by placing a series of short lines.

5-57 Completing The Outline

Continue placing outline sections and join up the last line with the first using "select" as normal. Complete the command with the "finish" button. It is not necessary to make the lines join exactly, as the "finish" command will redraw the last line completely and make the join.

5-58 PCB Outlines With More Than One Continuous Edge

PCB outlines with cutouts in the centre cannot be drawn using the BOARD command. To produce these you must create the exterior outline using the BOARD command as normal, then use the TRACK command to produce an interior outline for the cutouts.

PAD COMMAND

5-59 The Pad Command

The Pad command allows the alteration or display of any of the pads used in the design. All pads are related to components and so either come into the design from the components library, or in the case of vias, are created as the track is laid down. However, the sizes defined in the library, or in the case of vias, by the software, may not be suitable for your particular application. This command allows you to change any particular pad you desire. Appendix B lists all the standard pad sizes and their shape numbers.

5-60 Pad Shapes And Sizes

Each different pad shape or size is allocated a number from 0 to 126, this is called a pad shape number and this identifies:-

a) the size of the pad, either diameter or thickness
b) the shape of the pad, either circular, square, oval, rectangular or hexagon
c) the size of the hole to be drilled in the centre of the pad, either A,B,C,D,E,F or G

The hole size is only used by the Artwork Generator package to produce the drilling drawing and you may use the letters to represent any particular hole sizes desired.

5-61 Empty Pads And Single Sided Pads

Pad shape 0 is a special case in that it indicates an empty pad, so that pads may be removed from one side of the PCB and not the other.

Normally components will have pads on both sides of the PCB unless they were brought into the design with BOTHS commands turned off (lower menu panel). If the BOTHS command is selected i.e. turned off, then components will be placed with pads on the opposite side of the PCB to the component. The exception is where the component has been designed as a surface mounted component in the Component Designer program, when the pads will be placed on the same side as the component. To pick up a pad you must have the cursor the same colour as the pad.

5-62 ALL/1/D/RETURN

This message prompts the user to select a mode of the PAD command. Use the keyboard to enter the All, 1 or D commands.

ALL Gives the user the option to change all the pads on any one or more components in one button action per component. When selected, the component will flash to indicate that the pads have been altered.

If you wish to change the pad shape again just use the right hand button.

1 Enter 1 if you only wish to change one pad at a time. If you wish to change the pad shape again just use the right hand button.

D This gives the option to display the pad shapes in use. Select each pad in turn and the pad shape number will be displayed.

RNEST COMMAND

5-63 The Ratsnest Command

The Ratsnest command activates a routine to select each unrouted track in turn (in the order of the netlist file) and allows the orderly placement of these routes. Using a netlist and the RNEST command ensures that you will not forget to connect any components as might easily happen if the track laying was done by using the TRACK command alone.

5-64 Generation Of The Ratsnest

There are three ways that tracks may become ratsnested:-

a) by moving components that are already track routed.

b) by entering a netlist from the main (executive) menu.

c) by special placement, see 5-71 below

Either way a ratsnest connection is shown in white on the display. A moved component may create a ratsnest which is not just one straight line between the components. Depending upon the amount of re-routing required it may be easier to unroute the ratsnest down to one connection line. See TRACK command, 5-24 for further details of keyboard commands which may also be used while using the RNEST command. N and A are particularly useful: N is used to skip through the ratsnested tracks and A is used to abort the RNEST function.

5-65 Routing From A Ratsnest Connection

Select the RNEST command. The next unrouted connection in the list will now be pointed to by the cursor. Also the red message panel will show information appertaining to the route/connection selected. In addition the lower menu panel will display the size of track specified in the netlist for this particular connection.

5-66 Changing The Track Size

At this point the track size may be changed by using the cursor on the menu panel. This may be done at any time up to completion of the route. The whole route will be changed, see both paragraphs under 9-31 for details of how to change a route thickness along its length.

5-67 Changing the Track Side

The left hand button may be used at any time, except just after the first and last points, to change the track side and add a via. Track side is usually entered before selecting the start point but should the whole track need to be changed to the other side then the first point in the track can be deleted to do this. See under MOVE TRACK for further details.

5-68 Routing The Track

If the connection is one straight line (pointer:1 total:2) then routing is a straight forward placement of track corners using "select". Orthagonal and 45 degree tracks will be placed as appropriate at each placement of the cursor.

If the white connection line is not a straight line the procedure for placing may be slightly more complicated. The point to be understand is that one is placing corners of tracks rather than the tracks themselves. Should any difficulty arise then the easy way to remedy the situation is to use the "U" key from the keyboard which will reduce the ratsnest connection to one straight line again.

5-69 Routing The Last Segment Of Track In A Route

When the corner for the last section of track is being placed (previous to last point) be careful to align one of the cursor cross hairs exactly over the component pad. Having done this the last track will be already orthagonal, and placed, since the last connection point already existed in the original ratsnest connection. Press "finish" to complete the route.

5-70 Memory Bussing (copy route commands)

When coming across a connection where the shape of the routed track could be repeated, the first route should be completed without pressing "finish" and then the "S" key pressed on the keyboard. This will Save the shape of the route. If the next route selected automatically is not the next in the group of similar shaped routes, then press "A" on the keyboard to exit from the RNEST command and use the cursor to select the MOVE TRACK command.

Now pick up the start point of the next member of the group of similar tracks and then press the "R" keyboard key. The Saved route will be placed down in one operation. You may continue in this manner until all of the group are placed, when you can exit the MOVE TRACK mode and re-enter to RNEST again.

If the next route selected automatically is the correct track but the wrong end press B to backwards recall the saved track.

5-71 Placing a ratsnested track from new.

If you want to manually enter a ratsnested track this can be done by selecting TRACK on its own, entering the track routing and pressing N to place it in ratsnested form. Non 45 degrees angles will be accepted, to enter them turn off the 45DEG indicator on the menu.

CHAPTER 6 PLOTTER ARTWORK GENERATOR

6-1 Introduction

The purpose of the plotter Artwork Generator is to convert the drawing file into a series of commands that your wet-ink plotter can understand, in order that hard-copy artworking may be obtained from the package.

We cannot here go into the details of the use of any particular plotter, but a few general words would not go amiss. Be sure to be familiar with the operation of your plotter before reading on. Although there are many different types of plotter, in general they will use replaceable pens that are driven over a paper surface in response to simple commands, such as "pen up", move X,Y etc. These commands are of a general form and can be issued by any number of different types of computer. There are some special types of plotter on the marketplace that can only be driven by the BBC computer, making direct use of the drawing VDU commands to obtain the plotting information. These are NOT suitable for this CAD package. All the remaining types are probably suitable and we have provided some compatibility information in the appendix F. If necessary, you may use this information to tailor the package to suit your plotter.

6-2 Paper Media

Amazingly PCB's can often be produced from the most diabolical artwork, but for good PCB production the artwork quality is paramount. Drawing office quality tracing paper can be suitable for direct 1:1 photoreproduction, but without doubt the best media is semi-matt mylar drafting film. Film does not tear and is very stable under different humidity conditions. It can be used with water soluble inks, which glossy film will not take, and this makes cleaning the pens easier. U.V. light used for exposing PCB board easily passes through this film.

6-3 Pens

Both pens and inks must be selected to suit the paper and the plotter. Sometimes, getting the match exactly right may take a little experimentation and a plotter-knowledgable draughting materials dealer can be invaluable here. For the Quick-Check plots, you are advised to use fibre-tipped pens and standard white plotter paper. These are easy no-fuss pens. For full plots try to use a good quality precision plotting pen and suitable dense black ink. Consult your plotter manual for the drawing speed and pen pressure and then contact your dealer for the best ink and pens to suit. Go for about 0.35mm line thickness if you can and 0.7 or 0.8 for 2:1 plots. Unless you are going to do a lot of plotting, don't buy expensive jewelled tipped or tungsten carbide tipped pens - better to go for specially smooth draughting film which does not wear the pen tip so rapidly.

With many plotters, especially the "office type", you may need to purchase an adaptor to suit good quality plotting pens and your draughting materials dealer can help here. You will be amazed at the improvement in performance.

6-4 Care of Pens

All this improvement in performance has some drawbacks. Apart from the pens being expensive, they are easy to damage by mishandling or dropping. Also they must be cleaned SOON after use if they are not to become clogged up. When not using a pen, even for as short a time as a few minutes, turn the pen upside down (nib uppermost) and replace the cap. Strange as this may seem turning the pen upside down helps to stop the ink drying in the nib. After use for the day, unscrew the nib and clean it in warm running water for several minutes until the water runs clean.

There are now some new types of wet-ink pens on the market that are "disposable" and do not need cleaning, providing they are capped and inverted religiously after use. They are not yet available for all types of plotter, but if they do suit yours, I can recommend that you try them, they are almost as no-fuss as felt tips.

6-5 COMMAND DESCRIPTION

6-6 Plot Type

Press T to toggle the different options. This command allows the output of different types of artwork, as follows:-

6-7 Full

This is a full, artwork quality plot of the pads and tracks for the side of board indicated in the SIDE command below - pen 1 will be used.

6-8 Quick

This will produce a plot containing all the elements of the PCB, but drawn quickly as a "check plot". Both sides of the PCB will be drawn, as will the component footprints and also the board outline, if specified. It's use is for checking the artwork at various stages before committing expensive plotting film and time to a full plot. This is also useful for working on a complicated part of the PCB where it is sometimes easier to work on a printout, than from the screen.

If 4 pens are selected the top tracks will be in pen 3, the bottom in pen 2 and the component outlines in pen 1. The unrouted tracks (if any) will be in pen 4.

If 1 pen is selected you will be asked to change the pen between each of the 4 stages of plotter output.

It is usual to have
pen 1 - Black
pen 2 - Blue
pen 3 - Red
pen 4 - Green

If 1 pen is selected, you will be asked to change the pen between each of the 4 stages of plotter output.

Plot Type cont'd

6-9 Silkscreen

This is a plot of the footprints (component shapes) and footprint words, plus the board outline, if specified. This is normally used to generate the artwork required for printing of the PCB by the silk-screening method. For unusual applications the bottom side of the PCB may also be plotted.

The plot will be made with pen 1.

The silkscreen plot also makes an ideal assembly drawing and for this use you may also wish to over plot one or more of the other types of output e.g. the Solder Mask would also give the pad positions.

6-10 Hole Layout

This gives the PCB drilling information. Many PCB manufacturers will digitise the hole positions in preparation for CNC drilling and for this they like to have a precise cross or point from which to 'pick up' the centre of the hole.

If you wish, the track layout (full plot) may be plotted with hole centres showing, see 6-18 below, but this creates a problem for PCB manufacturers when using plated-through-holes as the PCB etchant will eat away the through plating if a hole is left exposed in the centre of a pad.

The drilling drawing also give the sizes of the holes as specified by the pad number, see Appendix B. You may specify any particular hole sizes you wish to suit your needs, for each size of hole between A and G. As far as the PCB design package is concerned there is no relevance placed upon the drill size to be used, the letter reference is provided solely to distinguish different hole sizes in production.

Plot Type cont'd

6-11 Solder Mask

This option will cause the plotting of just the solder pads, (no tracks) for the side of board selected.

The artwork produced by this plot is used to create a silkscreen mask for the solder resist pattern that will be needed if the PCB is to be flow-soldered. You should turn off the "pad holes" function for this plot.

6-12 Side

Press the S key to toggle the two options for this command.

6-13 Top

Plots only information that was placed on the top or "red" side of the board design.

6-14 Bottom

Plots only information that was placed on the bottom or "blue" side of the board design.

6-15 Scale Ratio

Press the R key to change the plotting scale from 1:1 to 2:1. This is useful for improving the quality of the artwork for sensitive or miniature applications. The artwork should later be reduced to the correct size photographically, reducing any plotting errors, marks, etc. by one half. With high quality modern plotters the 2:1 option would not really be needed, but it is provided to enable users to deal with unusual applications.

6-16 Board Edge

The B key is used to toggle this function on and off. With the function turned ON the outline of the PCB will be plotted. This is useful for check plots and some uses of the silkscreen plot (e.g. assembly drawings), but it is inconvenient for items such as track layouts as the outline would be reproduced in copper, which may not be desirable, so the facility to turn it off is provided.

6-17 90 Degree Shift

The N key toggles the facility to rotate the artwork by 90 degrees before plotting, this may be useful if the aspect ratio of the PCB will fit the plotter one way round, but not the other. In conjunction with the offset command, see below, it may enable several plots to be made on one sheet of plotting film.

Some plotters do not support the 90 degree rotation command and in these cases the command will be ignored by the plotter.

6-18 Pad Holes

Pressing the H key will allow you to toggle between plotting solder pads with holes in their centres or not. For normal through-plated PCB production the pads should not have holes plotted in their centres because the acid etchant will eat away the plating. However, for small batch production of non-PTH boards it is useful to have centring holes in order to aid the drilling of the PCB holes.

If you want to have centering holes, be careful to use pads of about 0.050" or larger as a standard size plotter pen of around 0.015" will not be able to plot a small circle and still retain a hole in the centre. See appendix B.

6-19 Offset X, Offset Y

The O key offers the facility to change the X and Y co-ordinates of the position on the paper that the plotter will start plotting. By using this command you can plot several drawings on one piece of film or paper. You may wish to centre the artwork on the film and this may also be achieved by using the offset command.

Enter the amount of offset required in mils (0.001") The range of entry for both X and Y is 0 to 99.999 inches (99999 mils). However, in practice the range that you may use is bound to be limited by the plotter's maximum draughting size.

6-20 RHS Edge, Bottom Edge

Select E key to operate this command. The "edges" refer to the Right Hand Side and Bottom edge of the PCB as seen on the screen.

The system's drawing area is 24" by 24", but your PCB may often be smaller than this and so this command tells the system how much of the drawing area to plot. The range is from 0 to 23.999" for both edges and the unit of entry is in mils (0.001") e.g. 7.5 inches would be entered as 7500.

The RHS Edge command is also used to determine the correct position of the LHS Edge when a "bottom" plot is made.

Note: It is important to set this command correctly otherwise you will have problems in plotting the board exactly where you want it on the paper.

6-21 Example Of Problem Caused By Setting The Values Too High

Most wet ink plotters ignore all commands that are "out of area" so if, for example, you have a 5" by 5" PCB drawn at the top left hand side of the 24" by 24" drawing area and you had the E command set to 23.99 x 23.99 your plotter would need a 24" x 24" drawing area to be able to reproduce the PCB design correctly. In the above example, the plotter would not do anything at all unless it had a drawing area bigger than 19" x 19", since all of the PCB drawing would be "out of area".

Note:- The plotter's 0,0 coordinate is bottom left, whereas the drawing's 0,0 coordinate is top left. To further complicate matters, the right hand side of the PCB becomes the left hand side for bottom plots.

6-22 Number Of Pens

The P key toggles between the number of pens that your plotter is capable of holding. It can be either 1 or 4. If 4 is selected the plotter is assumed to be able to change its own pens otherwise any change will be prompted.

6-23 Dump To Disc

The D key toggles this option. Designs may be filed onto a floppy disc in plotter-ready format by selecting this option and pressing G for GO. Plotter files are stored under the directory, prefix O. This means you can do all of your PCB design work at one location and then take your finished work to another location for wet-ink plotting. Alternatively you may save all your plotting work until a more convenient time for plotting. You do not need the PCB design software to plot the designs from disc file. Merely type CTRL-B and *PRINT filename.

NOTE: The *PRINT command is not available on a standard BBC B computer.

6-24 Width Of Pen

Typing the W key will allow the option to adjust the plotting program to accommodate different widths of pen traces.

6-25 Recommended Pen Size

1:1 Plots

We recommend the use of 0.35mm or 0.4mm pen as this gives about 0.015" track widths from a single pen stroke and the program has been optimised to work with this size of pen. Pen sizes of between 10-20 mils (0.010" to 0.020") can however, be used satisfactorily, except that the minimum track size will be set by the pen's drawing width.

2:1 Plots

You should use a double thickness pen to achieve the correct line thicknesses. The W setting should be set at approximately half the pen size used.

6-26 Pad Holes

The pen nib size determines the smallest size that a pad can be drawn and still contain a hole. The program tries to make the outside size correct for the pen size in use and so larger pens will draw over the hole on small pads.

6-27 Line Thickness Variability

Most plotter pen manufacturers state only an approximate line thickness and indeed the type of ink and media in use will affect the thickness drawn. Also, between different plotters, the draughting speed and pen force will additionally affect the thickness of the line. Some plotters may have variable plotting speed, see appendix F for details of changing the speed command sent to the plotter.

6-28 Guaging The Correct Setting

To guage the correct setting for the W option you should make a sample PCB drawing containing various size pads and copper areas or edge connector fingers. Plot out the sample using a good pen and using an average W setting corresponding to the pen. i.e. for a 0.35mm pen try setting the W option to 14 mils. Repeat the plot using values a few mils either side of the average. Now carefully look at the finished results and select the size that gives holes in the smaller pads while still plotting solid blocks of ink in the copper areas. If the W setting is too large, the areas will look striped, if the W setting is too small then an increased number of pad sizes will have their holes affected.

6-29 Mirror Image

The M key toggles the command to produce mirror image plotting. If you are going to use the artwork directly to produce a PCB it may be benificial to use mirror image plots so that the drawn-upon surface is directly in contact with the PCB, thus reducing any fuzziness caused by parallax.

6-30 Go

Use this command when you are ready to plot. You will be given the option of setting the paper ready before pressing the SPACEBAR to start plotting. At the last possible moment you should test the pen(s) to ensure that the ink is flowing freely as it only takes a few minutes of non-use for the ink flow to falter or even cease altogether. Press RETURN to abort plotting.

6-31 ESC

Will return you to the main system menu. Note that returning to the main menu will cause all the preset parameters of the artwork generator to be returned to their default values.

CHAPTER 7 PRINTER ARTWORK GENERATOR

7-1 Introduction

The Printer artwork generator has been provided to allow PCB's to be satisfactorily produced when a plotter is not available.

The printer has to be capable of quad-density graphics and the program has been pre-set to suit Epson style codes, although the printer codes may be altered to suit other quad-density printers.

To produce professional quality plots a wet-ink plotter is obviously the best output device, but the artwork generator provided with this package produces a dramatically smooth and high quality output, all be it a rather slow process.

Output for the printer is calculated and buffered in batches and since any item of the PCB design may be anywhere in the file, a vast amount of data has to be processed for each batch of passes of the printer head. One should not, therefore, expect this part of the process to be undertaken quickly. This is distinctly different from a normal screen dump but the resulting improvement in resolution is well worthwile.

7-2 Paper Media

Ordinary thin printer paper is suitable for plots and PCB's can be produced from them directly by oiling the paper to make it transparent to UV light.

Double-size plots are also possible and these can be photographically reduced onto clear film ready for normal PCB production, hence the thickness of the paper is not particularly important.

7-3 Stability and Accuracy.

The plots made by the printer artwork generator are accurate down to the resolution of the printer dot size and transport mechanism, but the stability of printer paper is not very good so that if accuracy is of paramount importance, you should make photographic copies as soon as possible after printing.

7-4 COMMAND DESCRIPTION

7-5 Plot Type

Press T to toggle the different options. This command allows the output of different types of artwork, as follows:-

7-6 Full

This is a full, artwork quality plot of the pads and tracks for the side of board indicated in the SIDE command below.

7-7 Silkscreen

This is a plot of the footprints (component shapes) and footprint words, plus the board outline, if specified. This is normally used to generate the artwork required for printing on to the PCB by the silk-screening method. For unusual applications the bottom side of the PCB may also be plotted.

The silkscreen plot also makes an ideal assembly drawing.

7-8 Hole Layout

This gives the PCB drilling information. Many PCB manufacturers will digitise the hole positions in preparation for CNC drilling and for this they like to have a precise cross or point from which to 'pick up' the centre of the hole.

If you wish, the track layout (full plot) may be plotted with hole centres showing, see 7-16 below, but this creates a problem for PCB manufacturers when using plated-through-holes as the PCB etchant will eat away the through plating if a hole is left exposed in the centre of a pad.

The drilling drawing also gives the sizes of the holes as specified by the pad number, see Appendix B. You may specify any particular hole sizes you wish to suit your needs, for each size of hole between A and G. As far as the PCB design package is concerned there is no relevance placed upon the drill size to be used, the letter reference is provided solely to distinguish different hole sizes in production.

7-9 Solder Mask

This option will cause the plotting of just the solder pads, (no tracks) for the side of board selected.

The artwork produced by this plot is used to create a silkscreen mask for the solder resist pattern that will be needed if the PCB is to be flow-soldered. You should turn off the "pad holes" function for this plot.

7-10 Side

Press the S key to toggle the two options for this command.

7-11 Top

Plots only information that was placed on the top or "red" side of the board design.

7-12 Bottom

Plots only information that was placed on the bottom or "blue" side of the board design.

7-13 Scale Ratio

Press the R key to change the plotting scale from 1:1 to 2:1. This is useful for improving the quality of the artwork for sensitive or miniature applications. The artwork should later be reduced to the correct size photographically, reducing any printing errors, marks, etc. by one half.

7-14 Board Edge

The B key is used to toggle this function on and off. With the function turned ON the outline of the PCB will be printed. For plots such as track layouts the outline would later be reproduced in copper, which might not be disirable, so the facility to turn it off is provided.

7-15 90 Degree Shift

The N key toggles the facility to rotate the artwork by 90 degrees before printing, this will be useful if the aspect ratio of the PCB will fit the printer paper one way round, but not the other.

7-16 Pad Holes

Pressing the H key will allow you to toggle between plotting solder pads with holes in their centres or not. For normal through-plated PCB production the pads should not have holes in their centres because the acid etchant will eat away the plating. However, for small batch production of non-PTH boards it is useful to have centring holes in order to aid the drilling of the PCB holes.

7-17 Offset Right, Offset Down

The O key offers the facility to change the X and Y co-ordinates of the position on the paper that the printer will start printing. You may wish to centre the artwork on the paper and this may also be achieved by using this offset command.

Enter the amount of offset required in mils (0.001"). The range of entry for offset right is 8.000 inches (8000 mils),and that for offset down is 12.000 inches.

7-18 RHS Edge, Bottom Edge

Select E key to operate this command. The "edges" refer to the Right Hand Side and Bottom edge of the PCB as seen on the screen.

The system's drawing area is 24" by 24", but your PCB may often be smaller than this and so this command tells the system how much of the drawing area to plot. The range is from 0 to 23.999" for both edges and the unit of entry is in mils (0.001") e.g. 7.5 inches would be entered as 7500.

The RHS Edge command is also used to determine the correct position of the LHS Edge when a "bottom" plot is made.

Important Note: It is important to set this command correctly. Unless you are planning something special you should set these values to be just bigger than the extent of the PCB design as seen on the screen grid. Unlike the plotter artwork generator, if the design is bigger than the size of paper in the printer, the program will automatically split the design and print more sheets.

7-19 Page Length, Page Width.

The L key allows you to inform the program of the size of 'page' you wish to have the artwork split up into.

If your PCB design is larger than the size of paper in the printer then the program will split up the artwork into sections, which you can later join together. The 'joins' will be placed at intervals of the Page Length and Width you specify. If the sizes you give do not match exactly with the batch calculations, they will be rounded downwards by a small amount.

The minimum page length is 1.000 inches (1000 mils) and the maximum is 12.000 inches.
The minimum page width is 1.000 inches and the maximum is 8.000 inches.

Note that after every page a normal form feed is given and the paper will then be advanced by whatever form size the printer is set to. The page sizes given above are for the size you wish to split the design up into.

7-20 Pause after Page.

The P key toggles the option to stop and sound a signal every time a page is ready for a form feed. This is normally used for single sheet feeding applications.

7-21 Form Feed.

The F key toggles the form feed option. With this set on the printer will be sent a form feed command after every 'page' is printed.

7-22 Number of Passes.

The U key offers this option which may be set between 1 and 10 passes.

The density of the printout is greatly enhanced by increasing the number of times that the print head overprints the same part of the PCB. It does not significantly increase the time to plot a PCB artwork.

7-23 Mirror Image

The M key toggles the command to produce mirror image plots. If you are going to use the artwork directly to produce a PCB it may be benificial to use mirror image plots so that the printed surface is directly in contact with the PCB, thus reducing any fuzzines caused by parallax.

7-24 Modify Printer codes.

The A key allows access to another menu which shows the printer codes in use and allows the option to change them should your printer codes vary from those shown below.

The program is supplied set up for a standard Epson compatible Quad-Density dot-matrix printer.

Note: The printer must be set so that it does NOT produce line-feeds automatically with each carriage return. This is set by a switch inside your printer and if necessary, you should consult your printer manual to see how to change this switch.

If you have to alter this switch you may find that other software will now not do line feeds. This can usually be remedied by using an Acorn provided command, *FX6,0 before using the other software. *CONFIG. can be used on the Master to permanently set this command.

7-25 Setting of Codes as Supplied.

S	0	0	0	0	0	For your own use. eg. Form length.
V	0	0	27	51	21	Sets 21/72-inch line spacing.
G	0	0	0	27	90	Sets quadruple density graphics.
C	0	0	0	0	13	Produces carriage return.
L	0	0	0	0	10	Produces line feed.
F	0	0	0	0	12	Produces form feed.
D	0	0	27	74	1	Produces a line feed of 1/216-inch immediately, without a carriage return.
E	0	0	0	0	0	For your own use.

S is sent at the start of printing and E is sent at the end.

7-26 Go

Use this command when you are ready to print. Follow the instructions given at the beginning of the program for producing an artwork dump onto disc. ***Note this dump will require an empty formatted disc.*** Press RETURN to abort printing at any stage.

7-27 ESC

Will return you to the main system menu. Note that returning to the main menu will cause all the preset parameters of the artwork generator to be returned to their default values.

CHAPTER 8
EXTERNAL PROGRAMS

8-1 Summary.

This menu option is provided to enable further software applications to be run from within the framework of the present PCB suite.

Possible applications are file converters for word processor generated netlists and component lists, Netlist generation direct from circuit diagrams and Autorouting of track layouts.

8-2 Operation.

On pressing the E key the program will ask for the filename of the application program. This will be a Basic program and will be 'Chained'. Return from the application program should be by CHAIN"PCBM" and shouldn't change any integer variables. It should also be designed to run with PAGE set at &1C00 and HIMEM at &8000.

CHAPTER 9 STEP-BY-STEP EXAMPLE COMPLETE DESIGN PROCEDURE

9-1 Introduction

Consider the example circuit diagram shown on page 9.2. It's an alarm circuit and is to be made to fit into a box that fixes the size of the PCB at 5" x 2". However, the photo-diode is to fit onto an extension of the the PCB 0.3" x 0.8" and there is to be a 0.5" x 0.25" cut-out in the PCB to allow for some mechanical parts to be fitted in the box in one corner. The PCB outline has been saved as file BALARM on your disc. You may load it in so that you can see what shape it is intended to be, but we will design it again here.

9-2 Order Of Completing Various Parts Of The Design

Take a look at the chart showing "PCB Design Procedure". The right-hand side column is the main PCB creation route, but although one item - "design the PCB outline" - can be started, the remaining items require the earlier completion of other functions. The order of reading the following example should be used when designing your own PCB's.

We will not be giving a full description of all the commands in this section as this would be tedious. However, if at any time you do not fully understand what we ask you to do, please refer to the relevant section of this manual for a more detailed explanation. This particularly applies to the Board Designer program which has many features and reference should be made there now for a description of the menu and trackerball key functions in section 5-4.

9-3 Designing The Board Outline

From the main menu, clear the board using the X command and then enter the Board Designer using the B command.

Set the cursor to be Blue using the left hand button on your trackerball/mouse and select the BOARD command, using the centre or select button. Make sure the INCHG is turned on giving you a pattern of dots on the screen spaced 1" apart. Since most of our board dimensions are in one hundreths of an inch it would be useful to set the Gridlock command to LCK 4. However, the corner cut-out has a dimension that needs gridlock 2 so notice that we shall change the gridlock back to 2 during drawing.

Place the cursor over the top left-hand grid point. The position display should read 01000/01000 press the "select" button and draw a line to point 06000/01000 press "select" again.

Now change the gridlock to LCK 2 (0.050") then draw to and "select" the following points, changing the gridlock back to LCK 4 after the second point.

06000,	05500,	05500,	01000,	01000,
02750	02750	03000	03000	01000

Now finish the action with the "finish" button. We now have a complete PCB outline with a 0.500" by 0.250" cut-out, but we have forgotten the extension, so now we will try the MOVE BOARD command in order to modify the PCB outline.

Select MOVE and BOARD together and move the cursor back into the main drawing area. You will see a new line drawn from the cursor to the first point in the design. Now push the > arrow key a number of times until the message "you can go no further forward" is issued. Then push the < arrow key to make the cursor line point at the previous corner. This should be the bottom left-hand point (at 01000/03000).

Now press the DELETE key and you will see the point indicated disappear, to be replaced by a diagonal line. We have deleted the corner and the cursor is now drawing away from the previous point.

Continued on page 94

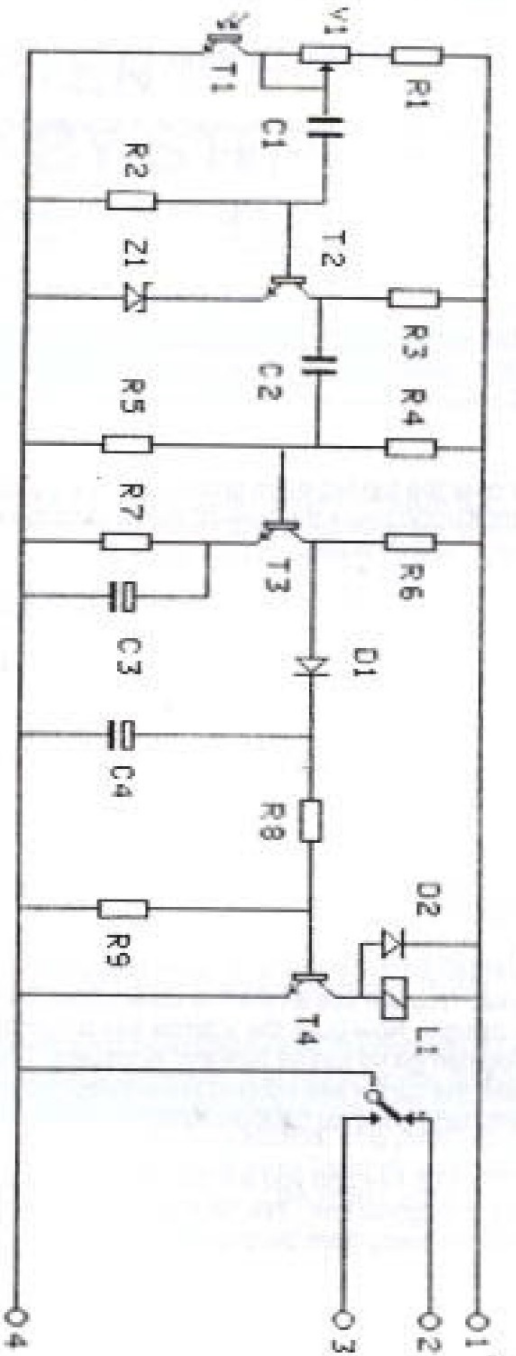
V1
T1
R1
C1
R2
Z1
T2
R3
R4
C2
R5
R7
T3
R6
C3
D1
C4
R8
D2
R9
T4
L1
J1
1
2
3
4

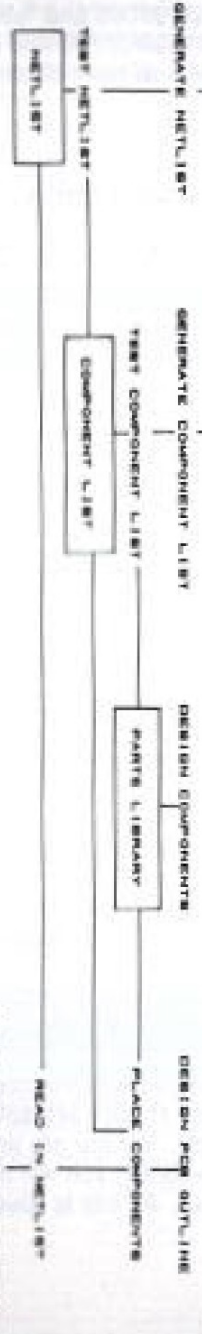
CIRCUIT DIAGRAM
BILL OF MATERIALS
GENERATE NETLIST
GENERATE COMPONENT LIST
DESIGN COMPONENTS
DESIGN PCB OUTLINE
TEST NETLIST
TEST COMPONENT LIST
PARTS LIBRARY
PLACE COMPONENTS
NETLIST
COMPONENT LIST
READ IN NETLIST
RE-ADJUST COMPONENT PLACING
ROUTE TRACKS
ADD NOTATION
PLOT ARTWORK
PCB DESIGN PROCEDURE

Move the cursor to point 00200/03000 and "select" a new corner, followed by points 00200/02700 and 01000/02700 and then "finish", by hitting the right hand button. You should now have drawn the PCB outline as seen in file BALARM.

9-4 Component List Generation

A Bill of Materials, or parts lists for the circuit in the diagram shown, might look something like that given below. Please note that this is an illustrative list, we make no pretensions about the viability of the design!

9-5 Bill Of Materials

3	Transistors	DIL transistor array	T2,T3,T4
1	Phototransistor	OP500	T1
1	Relay	RS348.970	L1
1	Diode	IN4148	D1
1	DIODE	IN4001	D2
1	Variable Resistor	47K	V1
3	Resistors	10K 0.25w Metal Film	R1,R3,R8
3	"	220K " " "	R2,R4,R9
1	"	22K " " "	R5
1	"	470Ω " " "	R7
1	"	4K7 " " "	R6
1	4 Way Terminal Block		J1
1	Diode	Zener	Z1
2	Capacitors	Moulded 0.1mFd	C1,C2
1	Electrolytic Cap.	l00mFd/l6v Radial	C3
1	Capacitor	47mFd/10v Axial	C4

This list must now be converted into a form suitable for PCB design and this is done using the Component List Editor.

Firstly, the list of parts is compared with the component library pages at the end of this manual and suitable shapes are selected to represent the components used in the design. If there are any components that do not have a matching shape in the library, you will need to design a new shape using the Component Designer. As this is covered fully in Chapter 2 we will not go into it further here.

Press ESCAPE to get back to the main menu. Note that this only works when you have nothing selected on the top hand portion of the board designer menu. From the main menu type T to enter the Component List Editor. We have already entered most of the component list under the file name CALARM so you can now type L to load this file and see for yourself what it looks like.

Notice that there are important differences between this list and the parts-list given above. Firstly line I shows that the three transistors in the design are represented by one component on the PCB, T2. T2 is a Dual in Line package containing 5 transistors. Next you can see that although D1 and D2 are different components electrically speaking, they both have the same shape and may be represented by the the same library part, DIDE50. Also observe that although many of the resistors have the same value, each one must be represented by a new line in the components list.

Capacitor C4 is missing from the list, so we must add this item: type A to add a line then type:

C4 C3E50 RETURN RETURN

to complete the list.

You may now list the complete file to the screen (and printer, if you wish). Also a test of the file should be made using the T command. This checks that all the library shapes really exist in the library.

Now use the S command to save the new file to the disc under the name ALARM and exit back to the main menu using ESC.

9-6 Placing The Components In The Design

The next step down this arm of the the design chain is to place the shapes of the components onto the PCB outline.

Enter the Board Designer using B from the main menu and your PCB outline should still be there. (If you have erased the design in between sessions, then reload it from the main menu. It is called BALARM).

Now using the cursor "select" COMPO from the menu and answer the messages by typing AUTO "RETURN" to automatically read in the components, Y "RETURN" so that the component reference is placed automatically, and then giving the filename ALARM. Make sure that the cursor colour is Blue (components on top and tracks on bottom) and the BOTHS is selected (left unchanged from when the program was entered) as we wish the components to have pads on both sides.

By moving the cursor into the screen area you can see that the first component T2 has already been selected automatically. A "beep" will be sounded for each component message that appears.

Change the gridlock to LCK 4 and place the component at position 03000/01500 by pressing "select". Now the next component T1 is loaded automatically onto the cursor. Place it at position 00700/02800.

The following list is the positions that you may place the remaining components, but you may cheat if you wish and load PALARM from the main menu! (in this case press A to abort component placing)

L1,04800 01400	D1,03600 01200	D2,04300 01200	V1,01200 02600	R1,01400 01300
R2,01900 01300	R3,02100 01300	R4,02600 01300	R5,01900 02300	R6,02800 01300
R7,02100 02300	R8,03300 02300	R9,03500 02300	J1,05200 01500	Z1,03700 02350
C1,01650 01350	C2,02350 01350	C3,02500 02500	C4,04050 02300	

Press RETURN to regain cursor control.

Not all of the components will be in exactly the correct place, or in exactly the correct orientation at this stage. This does not matter overmuch, but the proficient designer will attempt to place the components in the correct position for the design, saving time later when laying down the tracks.

9-7 Adding Footprint Words

Additional component references and other information for the silk-screen may be usefully added at this stage if you wish. This may be achieved by selecting the FWORD command. You will be asked for the component reference first and then the name you wish to place on the board.

9-8 Netlist Generator

The next step is to produce a list of connectivity information. This step is not strictly necessary as the connectivity may be generated by hand as the track routes are laid down in the board designer. However, it is a lot easier to do it at this stage and also both the netlist and the component list may be manually checked separately against the circuit diagram, giving a very good confirmation that all the tracks and components will be included in the design.

Note that for some components the polarity is important. The second diagram, page 9.9, shows the same circuit diagram, but with the pin numbers marked for those components where the polarity is of concern. Everywhere else the pin numbers may be arbitarily selected, but, of course, once selected you must be consistant with their use in the Netlist.

With most components it is fairly obvious which pin should be pin 1, but if you wish to check which pins are which, then this may be done in the Component Designer program. Load in the desired component and DELETE the pads one by one. The pads are deleted in reverse order so it is quite easy to tell which one is which number.

Once again to save time we have nearly completed a Netlist for the example design. Enter the Netlist Editor from the main menu by typing N and load in the file, NALARM. Now list the netlist to the screen.

Line 1 of the Netlist shows pin 1 of the phototransistor (T1) connected to pins 2 and 3 of the variable resistor (V1) and to one end, pin 1, of the capacitor C1.

Line 14 shows the supply input of J1 connected to L1 pin 2, D2 pin 1, R6 pin 2, R4 pin 2, R3 pin 2 and R1 pin 2.

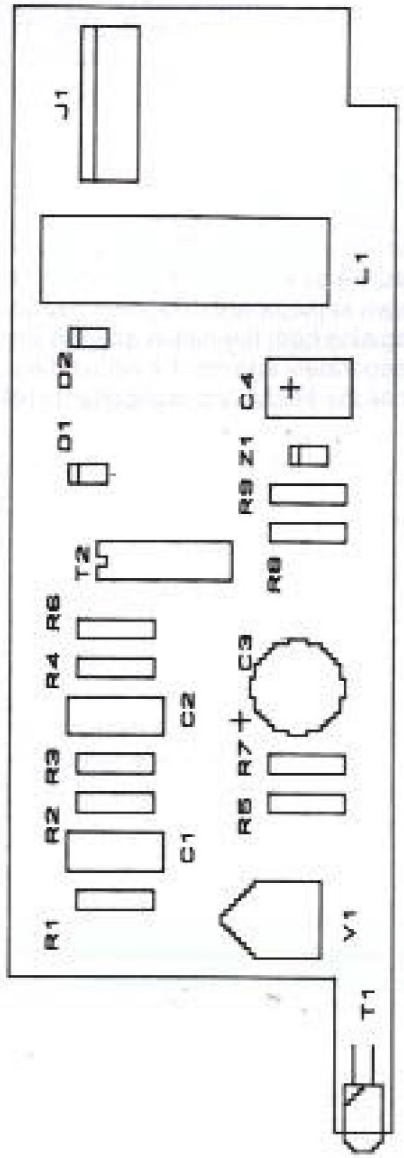

INITIAL COMPONENT PLACEMENT

To complete the Netlist you must add a line representing the common points all connected to J1 pin 4.

Start by using the A command, then enter:

J1 4 L1 4 T2 13 R9 2 C4 2 C3 2 R7 2 R5 2 Z1 2 R2 2 T1 2 RETURN
RETURN
The Netlist is now complete.

Notice that it is convenient to list the longer connections at the end of the file and in most cases it is pin 2 of each component that is connected. With I.C.'s it would of course vary, usually being pin 8 or pin 7, but with resistors and capacitors it is useful to keep to a routine of using pin 1 first, leaving pin 2 for the second connection, thus eliminating any mistakes that would be made by trying to keep to any more random method of pin allocation.

Note: With many designs it may be more beneficial to list all the common points at the begining of the netlist as this will make it easier to route the longer tracks first.

Testing The Netlist

Now you can test the Netlist by using the command T. If all is O.K. then save your file under the name ALARM using the S command. Note that the netlist is tested against your board design contained in sideways RAM not the component list file.

Exit back to the main menu by using ESC.

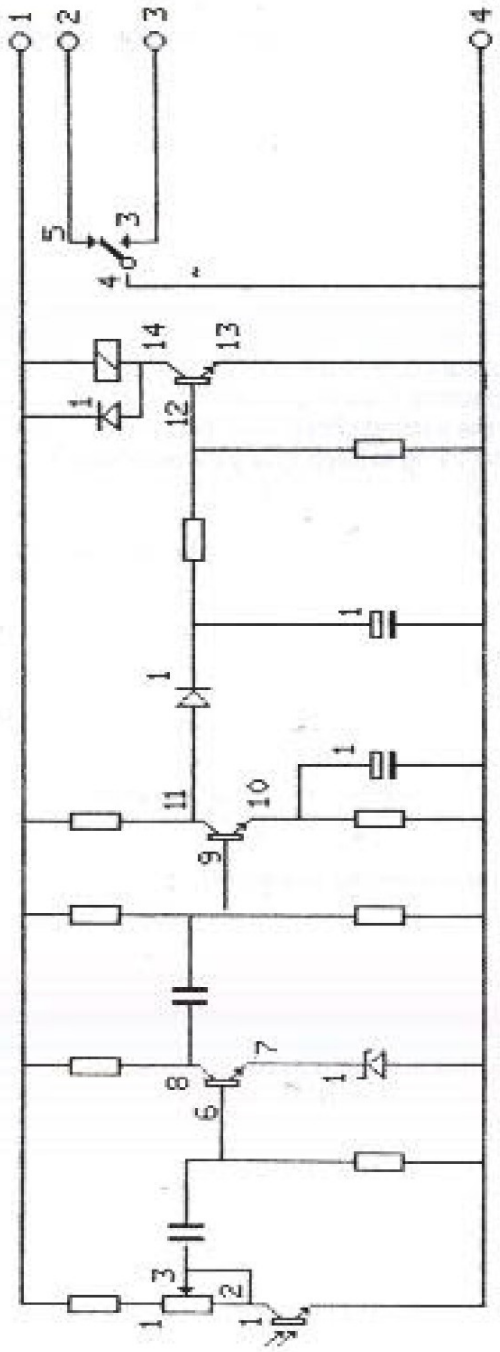

9-9 Netlist Entry Into The PCB Design (Ratsnest) And Component Position Adjustments

We can now progress on to the Ratsnest connection stage by "reading" in the Netlist.

From the main menu, press the R command and give the file name ALARM. When the file has been read in, press the B command to see the PCB.

All the components will now be shown with their connections to the components. Change the scale to SC 2 and spend a few minutes wandering around the PCB with the cursor. We are looking for congested connections and places where a component move or rotation will produce shorter, or less crossings of the tracks. One obvious improvement is to rotate L1 by 180 degrees.

Try this: set the cursor to Blue and select MOVE and COMPO. Pick up L1 and rotate it by two presses of the "Rotate" button. Replace the component so that its outline is in the same place as before. The connections and footprint word will be re-drawn after de-selecting COMPO on the menu. Changing the scale and other menu changes also cause a screen redraw to be made.

Some other improvements are:

Rotate	T2	by	90	degrees
"	R1	by	180	"
"	R3	by	180	"
"	R4	by	180	"
"	R6	by	180	"
"	R8	by	180	"
"	R9	by	180	"
Move	D1	to	03150	
			02350	

Finally tidy up the footprint words, not forgetting to change the cursor to Red. To do this select MOVE FWORD. The completed file should now look like our example RALARM, which you may now load and use if you wish.

9-10 Routing The Tracks

Now the main business of routing can begin. Loaded into the Board Designer you should have the modified Ratsnested PCB, as generated in the section above.

With the Blue cursor selected you can now select RNEST and the first track will be pointed to. Set the track size to be 25 (0.025"). It is the first route in the Netlist, T1 1 to V1 2, V1 3 and C1 1. Route the first section of track by pressing select at positions 01400/02800 and now press "finish": Note that only one position needs selecting to route both sections of track. If you make a mistake, correct it straight away with DELETE, as if the last section of ratsnest is either orthogonal, or at 45 degrees, it will be routed automatically when pressing "finish".

The next track will now be pointed to. Carry on routing up to V1 3 and afterwards to C1 1.

9-11 Moving Components In RNEST

At this point it becomes apparant that C1 would be better being rotated by 180 degrees, so abort out of RNEST by pressing A and use MOVE and COMPO to "rotate" the capacitor. Notice that the route has now become white to indicate it needs rerouting.

9-12 Moving Tracks

Use MOVE and TRACK to reroute this connection. Pick up the route by selecting the two points, or corners, of the track; now move the cursor away and a line will point to the old route. The > and < arrow keys can now point forwards and backwards along the route. Go as far forward as you can and then press the DELETE key once (or twice if necessary) to remove part of the old route. Then use "select" to complete the route back to C1 1. Notice that now you have to complete the route right on to the pad of C1 1, since we are using the TRACK mode, not RNEST mode. If we had been cautious about the use of the DELETE key and only deleted corner points in the routes, NOT the ends of the route, we could have maintained connectivity and the routing would have behaved as per RNEST. Also you can use the U key to remove all the old corners in the route at once if this is quicker.

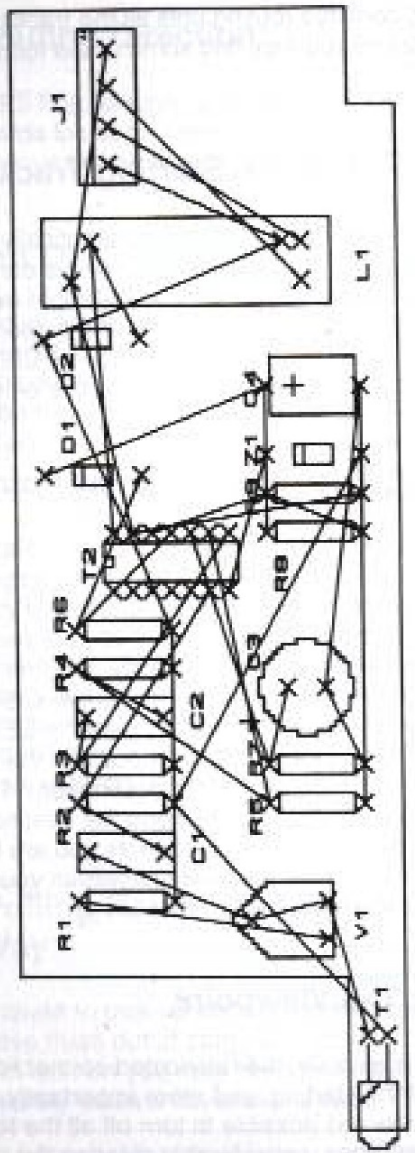

RATSNESTED BOARD

9-13 Continue Routing

Select RNEST again and continue routing until all the tracks have been placed. During this procedure you may find some of the following hints useful.

9-14 Side Of PCB When Starting Tracks

When RNESTing routes, the first points automatically picked up for you are always the same side as the colour of the cursor. If you need the other side press the DELETE key straight away and, before repositioning the start point, change the cursor colour over. Now the "start" will be from the other side of the PCB. (This will not work if you have placed the component with pads on only one side.)

9-15 Changing The Ratsnest Start Point

Sometimes you will find that you have picked up a Ratnested connection that follows the same route as a track already placed, to a destination near where you wish to go. Obviously you won't want to run a new track all the way next to one that is already placed. You can, of course, lay the new track exactly over the old track for part of the route and in many instances this is the easiest procedure for short stretches, but another way is to press the DELETE key as soon as the new route is picked up and reposition the "start" at another pad on the old route nearer the destination. The ratsnest connection will reappear again to show you the destination pad. Use this command procedure with caution as you are breaking the connectivity pattern which is contained only within your design now, the netlist file is no longer used.

9-16 Clearing The Viewpoint

In the early stages especially, the ratsnested connections can congest the view of the starting, and more importantly, the finishing pad. To clear the view it is possible to turn off all the top tracks including the ratsnest lines, considerably clearing the view. This is done by selecting "off" the top T in the lower half of the menu. At later stages it is often very useful to turn off the footprint and words.

This can be done using the top F in the lower half of the menu.

9-17 Routing Direction

When RNESTing, always route the track forwards, as the logic is not rearwards looking. The point of pick-up that the program gives you will always be the correct end to route from.

9-18 Out Of Netlist Order Routing

Any individual track may be routed out of Netlist order by using MOVE TRACK. Use A to abort the RNEST routines (at the end of routing a track) and select MOVE and TRACK. Pick up the track by selecting both pads and the routing is now identical to RNEST, except when routed you are not automatically fed onto the next connection. You can also skip through the netlist by using the N key.

9-19 Correcting Mistakes While Routing

If you make a mistake while routing, don't try to carry on, correct it straight away with the DELETE key. Each press of the DELETE key will remove one more section of track, or via, until the start point is reached, when you are offered the chance to reposition the start. Alternatively start again by pressing U to unroute the track back to 2 points.

9-20 Pulling Ratsnested Connections Out Of The Way

Don't be afraid to pick up ratsnest connections using MOVE TRACK just to move them out of congested areas. When you come to route them later on you may need to delete the unwanted corner, but that merely takes a keystroke or two.

9-21 Changing The Thickness Of Tracks After They Have Been Laid

Use the left-hand track size indicator on the lower menu (initially shown as RN so that ratsnested tracks are highlighted) to identify different size tracks. Those that are the size shown in the menu will be displayed white. If you wish to change a size, use MOVE TRACK. Select the track by picking up any two points. Observe the right-hand track size indicator on the lower menu panel. It will display the size of the track picked up. Now change the track size indicator (right hand side) and push the "finish" button. The original track route will be retained, but the size will be changed to the new setting on the menu panel.

9-22 Entering A Via

A via is entered automatically when you change side of board whilst placing a track (pressing left mouse button).

9-23 Deleting A Via

If you wish to remove a via from the PCB you should use ERASE COMPO as the program treats the via as a component. If you use ERASE and PAD you will still be left with a logical component in the design - even though it has no pads!

9-24 Changing The Sizes Of Pads

If you wish to check or change the size or shape of pads you may select PAD from the menu. Entering 1 or ALL, the pad number, and selecting the particular pad with the cursor will change either 1 pad on one side of the board or all the pads on the component to the new shape value. Selecting D instead of 1 or ALL allows you to display the pad size of any pad.

9-25 Adding Board Words

Copper words may be added to the design by selecting BWORD. Those placed with a Blue cursor will be placed on the bottom of the PCB and so will show in reverse on the screen. Those placed with a Red cursor will be on the topside (component side) of the PCB. It is always useful to add copper words to a PCB as this ensures that the PCB manufacturer will not accidentally reverse the master and so produce a board that is inside out.

9-26 The Finished PCB

When you have finished routing the tracks and testing the other commands given above, your finished board should look like the file called ALARM. The top and bottom tracks are shown in their plotted form on the next few pages. See the section on plotting artwork for descriptions of how to plot out your finished design.

9-27 Single Sided PCB

There are only a few tracks on the top side of the PCB and the experienced PCB designer will quickly spot how this PCB may be turned into a single sided board. Some of the commands below will be needed to do this operation.

9-28 Adding Extra Segments Into A Route

Use MOVE TRACK and pick up the track by selecting any two points. Now using the > and < arrow keys, select a point along the route (starting from the beginning) up to where the old route is still wanted. Now using "select" (and DELETE where necessary) create a new route path. Finish the new route with the "finish" button.

9-29 Changing A Track Side

If you wish to remove a route from one side of the PCB and replace it with an identical route on the other side, select MOVE TRACK and using the correct colour cursor pick up the route by selecting any two points.

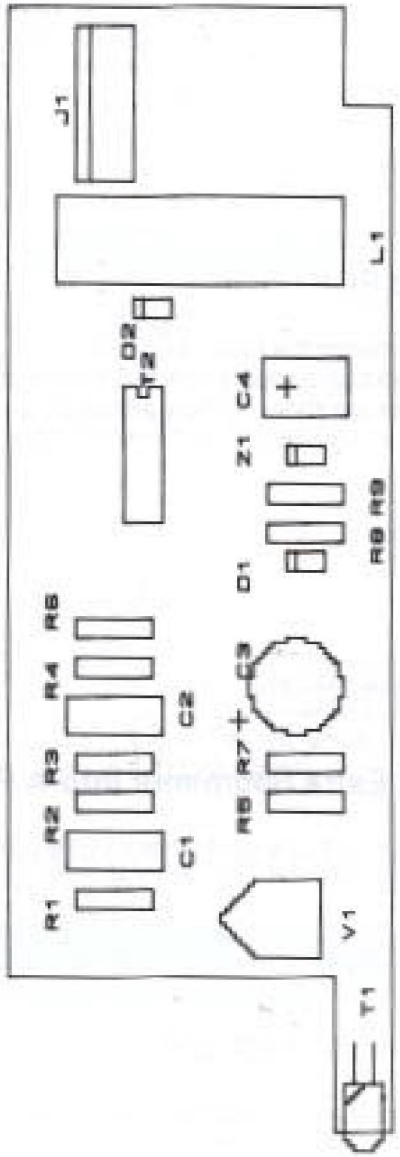

FINAL POSITION OF COMPONENTS

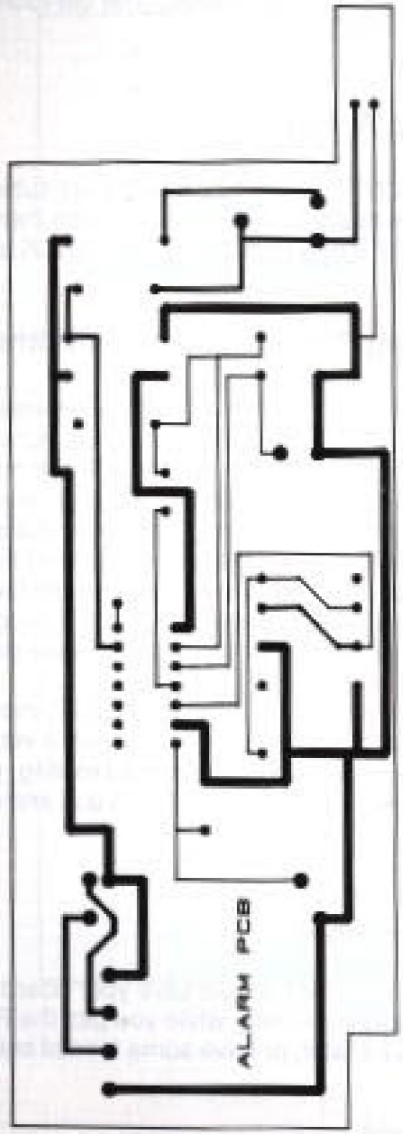

BOTTOM TRACKS

Now DELETE the track (don't use the < > arrow keys as the first point will already be indicated). Change the cursor colour to the new side and press the "finish" button. The old route will now change side of the PCB.

9-30 Deleting A Track

Sometimes the MOVE TRACK facilities are not sufficient to make a substantial change to a track. If this is the case then use ERASE TRACK and reroute a new track using the TRACK command.

9-31 Changing Track Thickness Within A Route

Sometimes you will need to "thin off" a track between two pads, this is sometimes called "necking". This cannot be done in the RNEST mode or MOVE TRACK mode, but in the TRACK mode the procedure is as folows. Select the starting point and route the track up to the necking point. Now "finish" the track and ignore the "no pad found" message. Repeat the procedure from the other end of the route back to the necking point. Now change the track size to the thinner track and "overlay" a length of track bridging the gap. Be careful to avoid accidentally picking up nearby pads.

Although necking cannot be done in the RNEST modes what you can do is to prepare for the necking by placing a via at each side of the neck and later, when you have finished routing, you may go back and change the side and size of the track and erase the vias. (Use erase component)

9-32 Saving The Design

After exiting to the main menu you should save your board design. Although the board will stay in memory while you plot the PCB master, you could easily forget to save it later, or have some kind of crash.

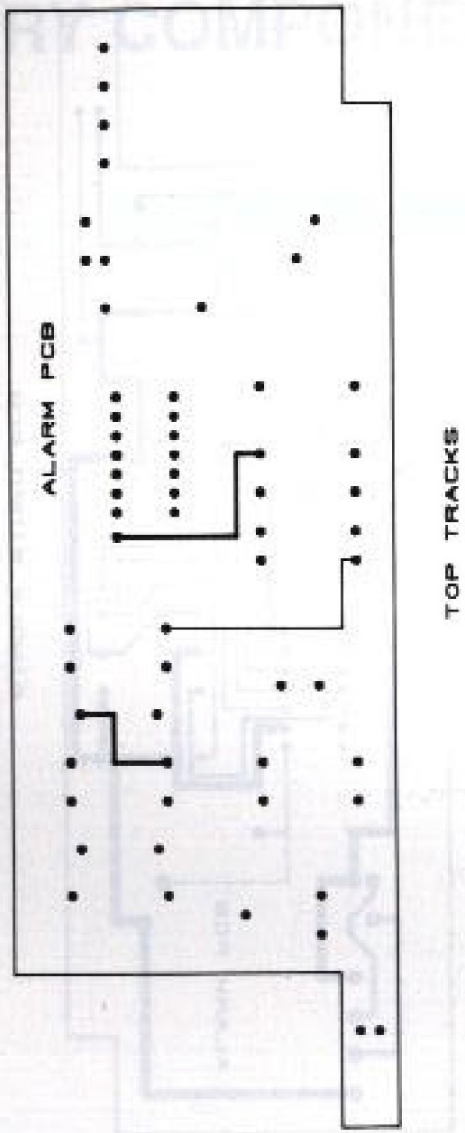

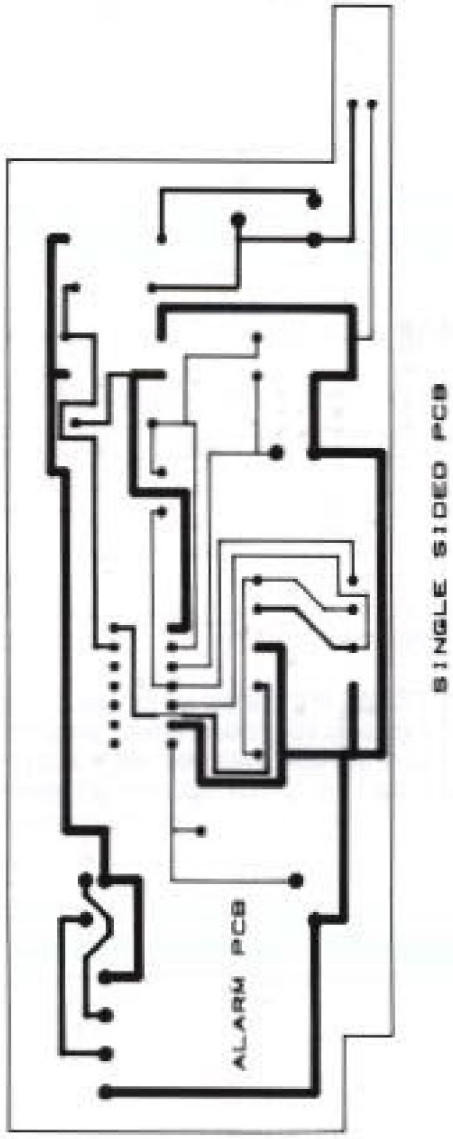

APPENDIX A
LIBRARY COMPONENTS

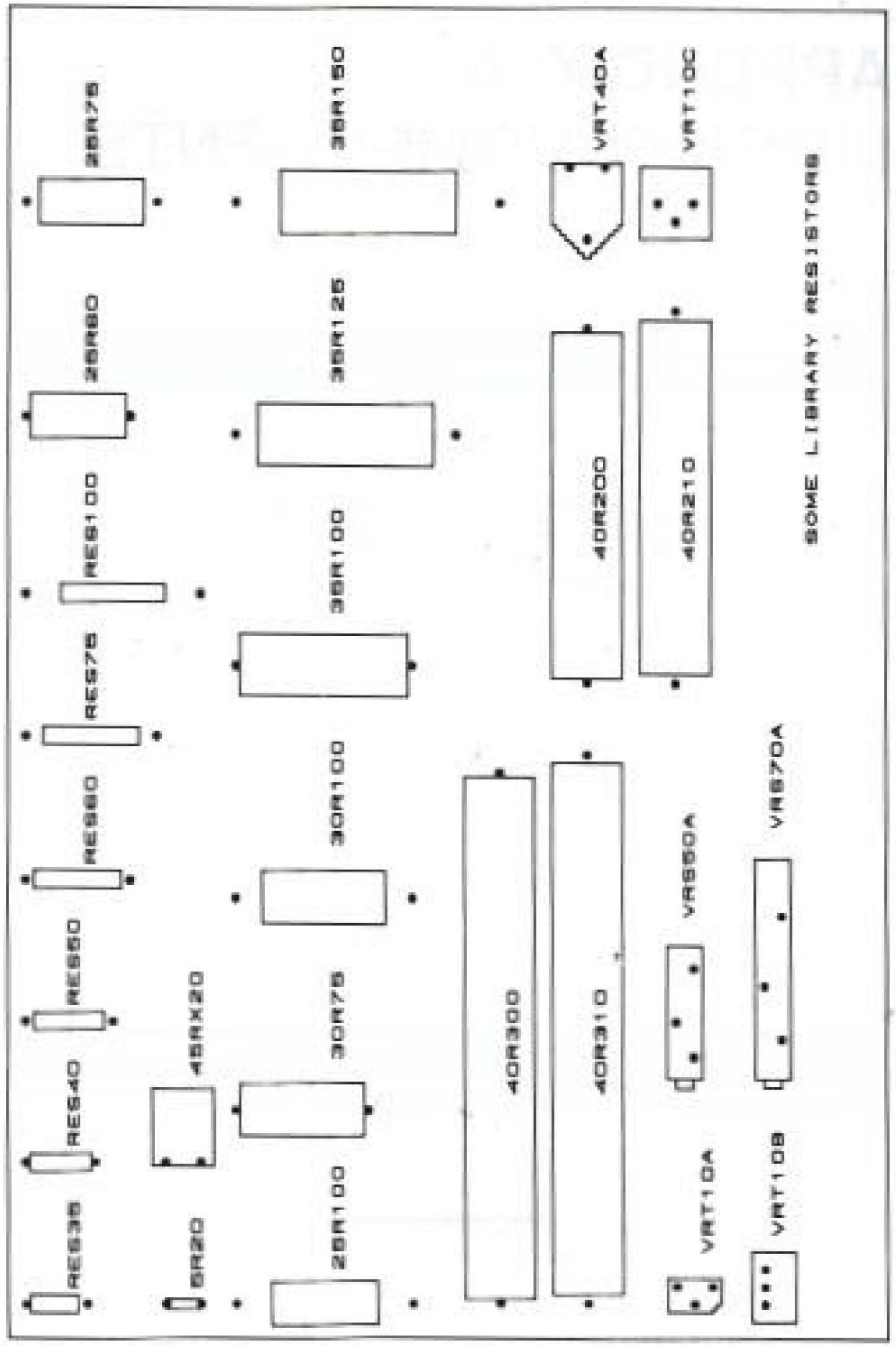
RES35
RES40
RES50
RES60
RES75
RES100
25R60
25R75
6R20
45RX20
25R100
30R75
30R100
35R100
35R125
35R150
40R300
40R310
40R200
40R210
VRT10A
VRS50A
VRT10B
VR670A
VRT40A
VRT10C
SOME LIBRARY RESISTORS

A-1

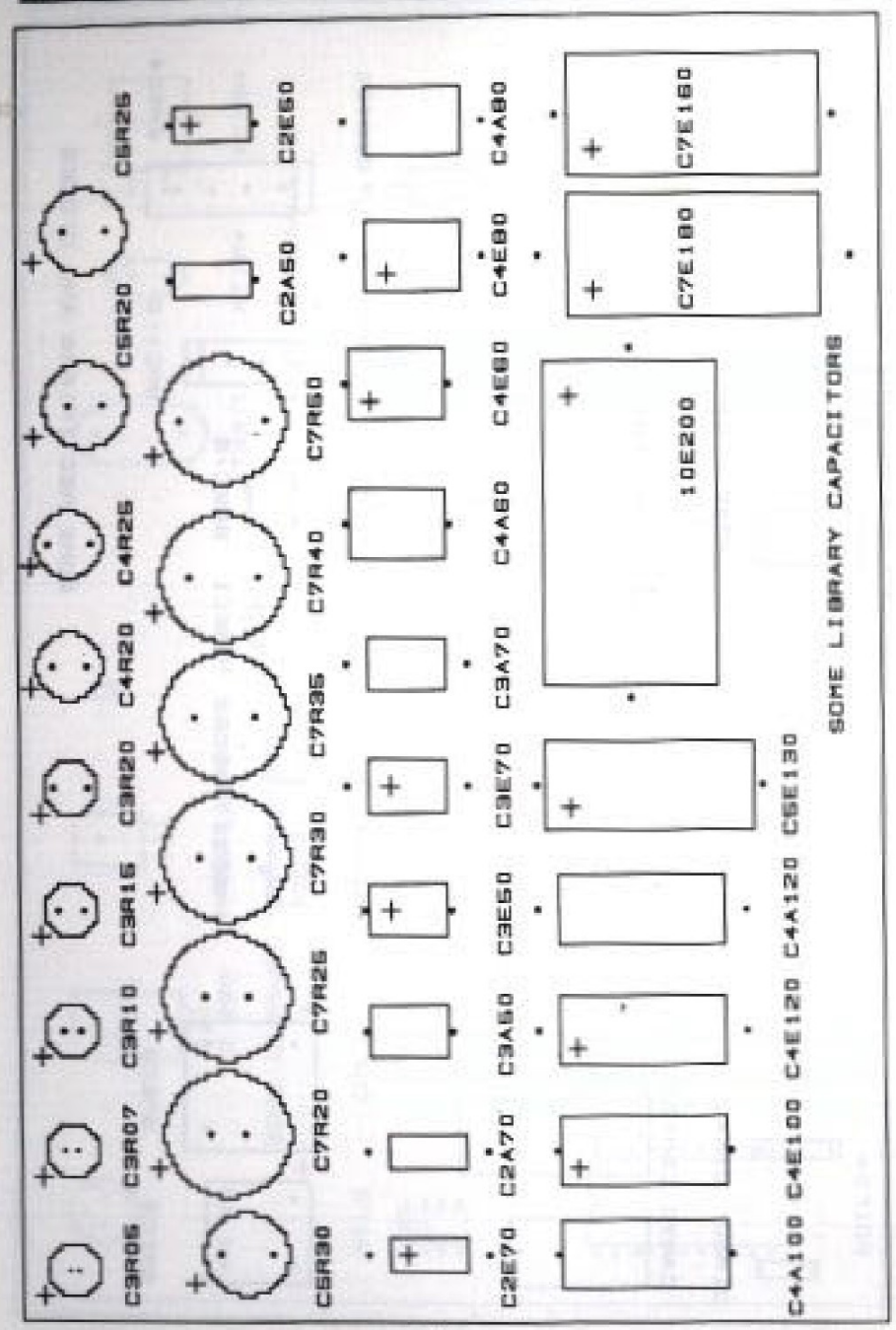
C3R05
C3R07
C3R10
C3R15
C3R20
C4R20
C4R25
C5R20
C5R25
C5R30
C7R20
C7R25
C7R30
C7R35
C7R40
C7R50
C2A50
C2E50
C2E70
C2A70
C3A50
C3E50
C3E70
C3A70
C4A50
C4E50
C4E80
C4A80
C4A100
C4E100
C4E120
C4A120
C5E130
10E200
C7E180
C7E160
SOME LIBRARY CAPACITORS

A-2

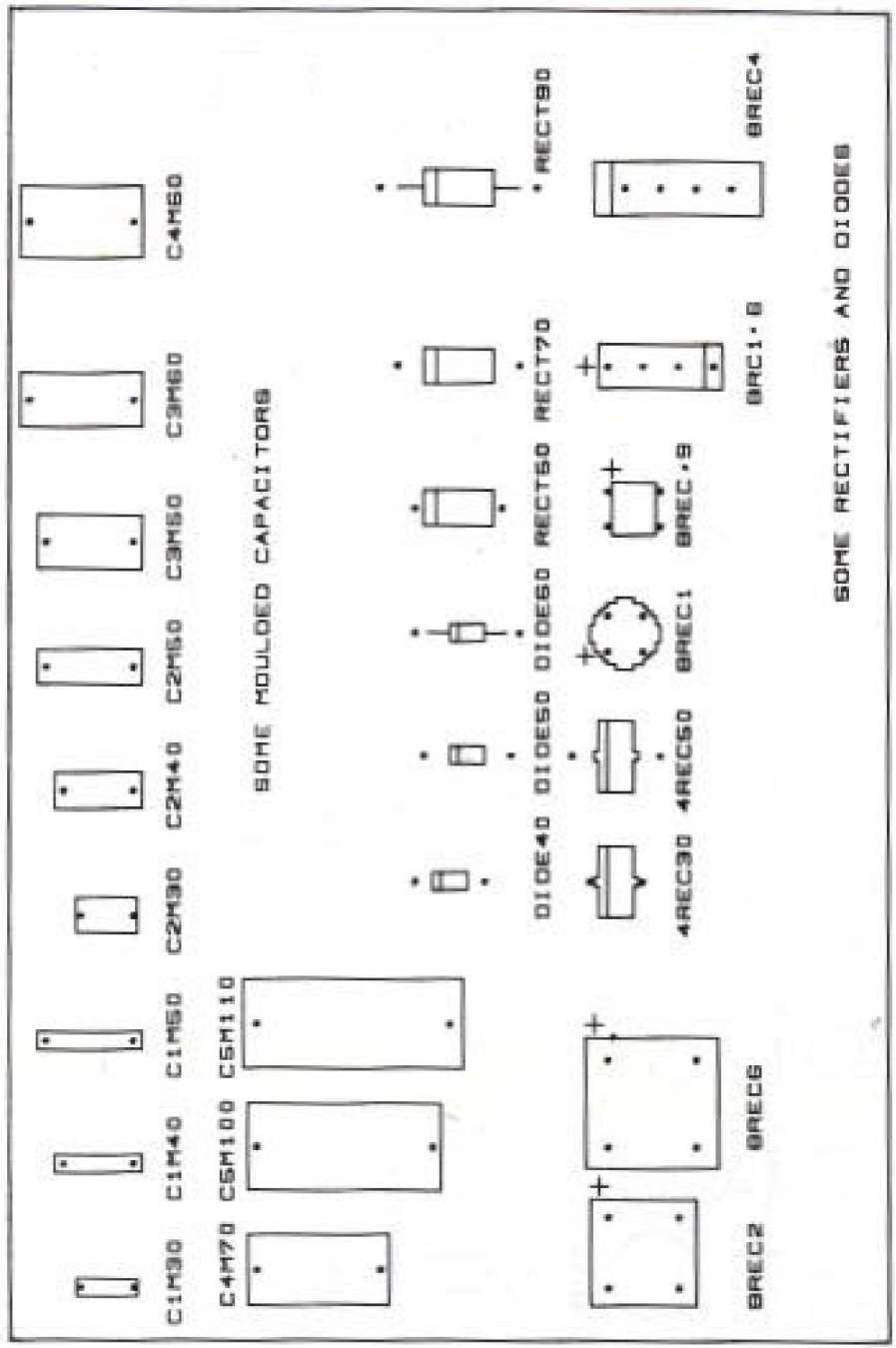
C1M30
C1M40
C1M50
C2M30
C2M40
C2M50
C3M50
C3M60
C4M60
C4M70
CSM100
CSM110
SOME MOULDED CAPACITORS
DIOE40
DIOE50
DIOES0
RECT50
RECT70
RECT90
4REC30
4REC50
BREC1
BREC.9
BRC1.6
BREC4
BREC2
BREC6
SOME RECTIFIERS AND DIODES

A-3

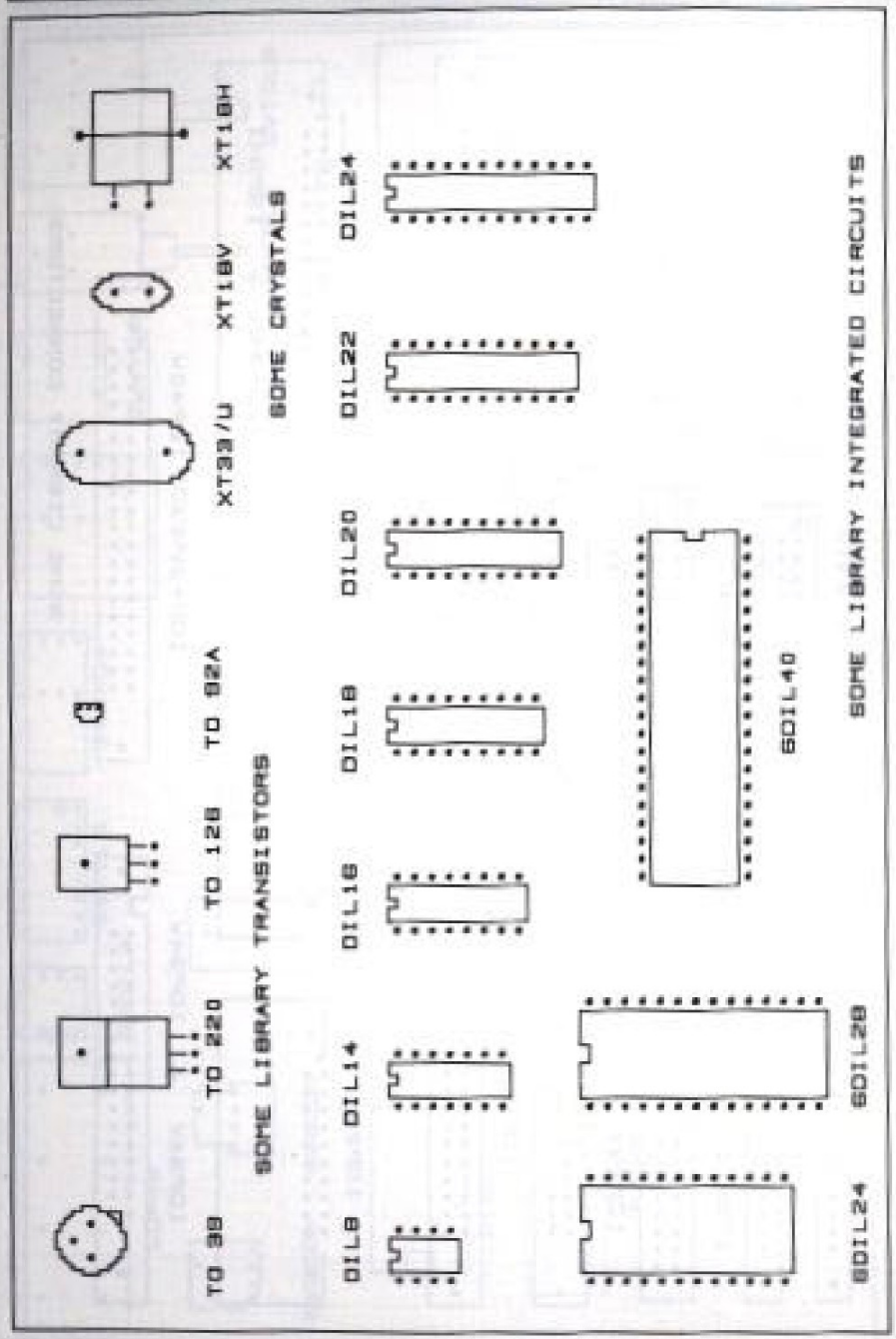
TO 39
TO 220
TO 126
TO 92A
XT33/U
XT18V
XT18H
SOME LIBRARY TRANSISTORS
SOME CRYSTALS
DIL8
DIL14
DIL16
DIL18
DIL20
DIL22
DIL24
SDIL24
SDIL28
SDIL40
SOME LIBRARY INTEGRATED CIRCUITS

A-4

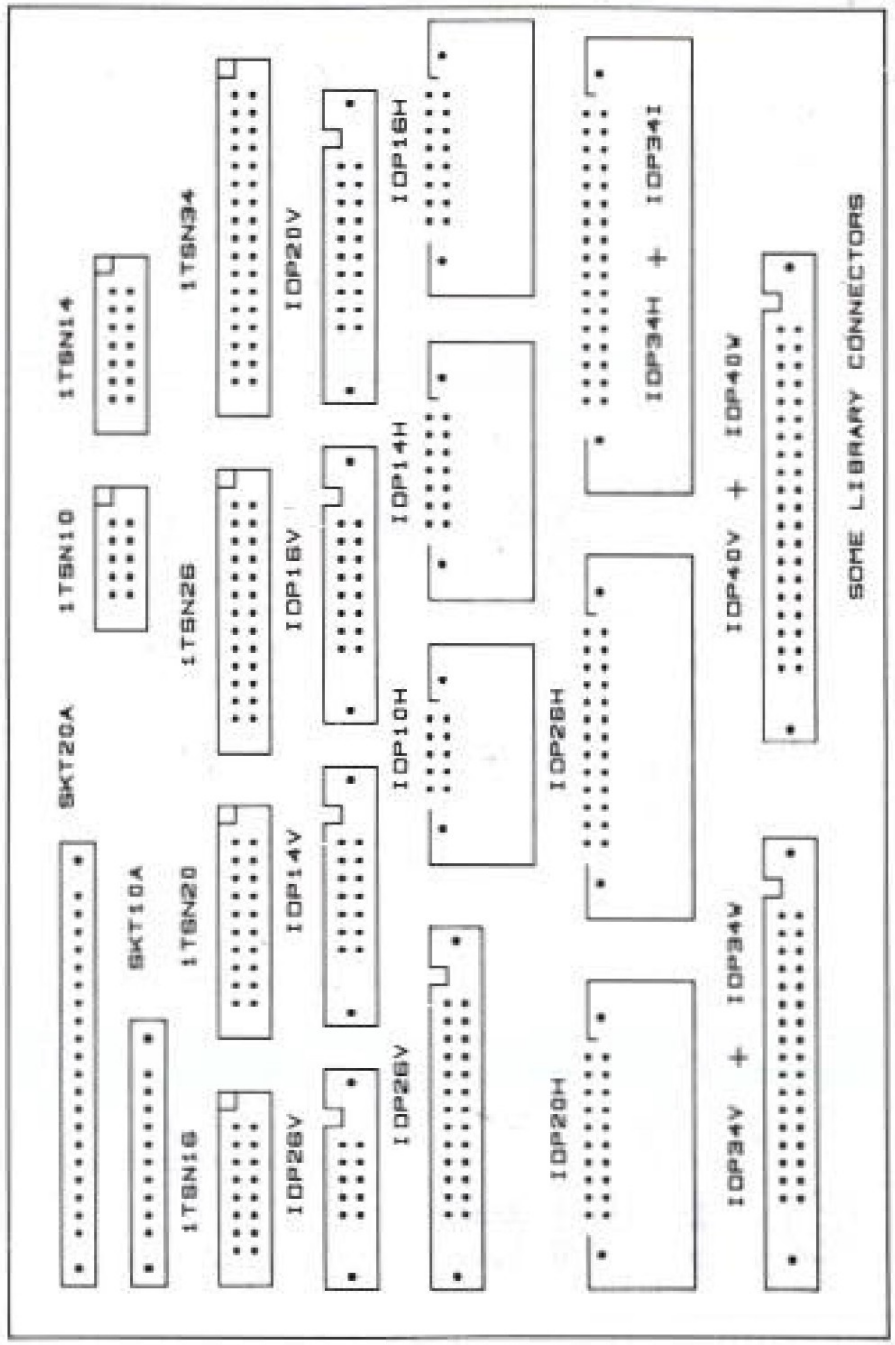
SKT20A
SKT10A
ITSN14
ITSN10
ITSN34
ITSN26
ITSN20
ITSN18
IOP20V
IOP16V
IOP14V
IOP26V
IOP16H
IOP14H
IOP10H
IOP26V
IOP34H + IOP34I
IOP28H
IOP20H
IOP40V + IOP40W
IOP34V + IOP34W
SOME LIBRARY CONNECTORS

A-5

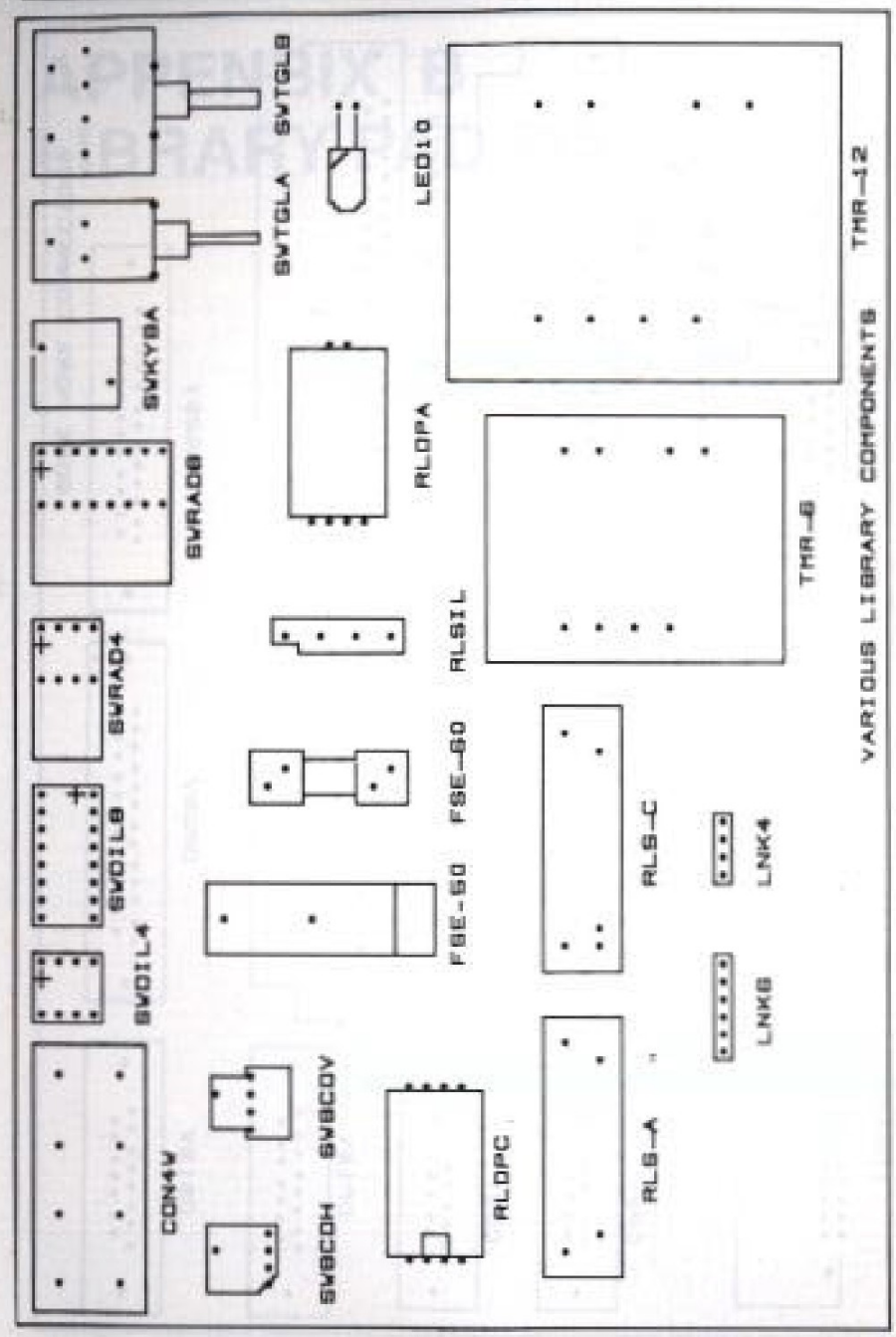
SVTGLA
SVTGLB
LED10
THR-12
SVKYBA
RLOPA
SVRAD8
THR-8
SVRAD4
RLSIL
SVOIL8
FSE-60
FSE-60
SVOIL4
RLS-C
LNK4
LNK6
CON4V
SVBCOV
SVBCOH
RLOPC
RLS-A
VARIOUS LIBRARY COMPONENTS

A-6

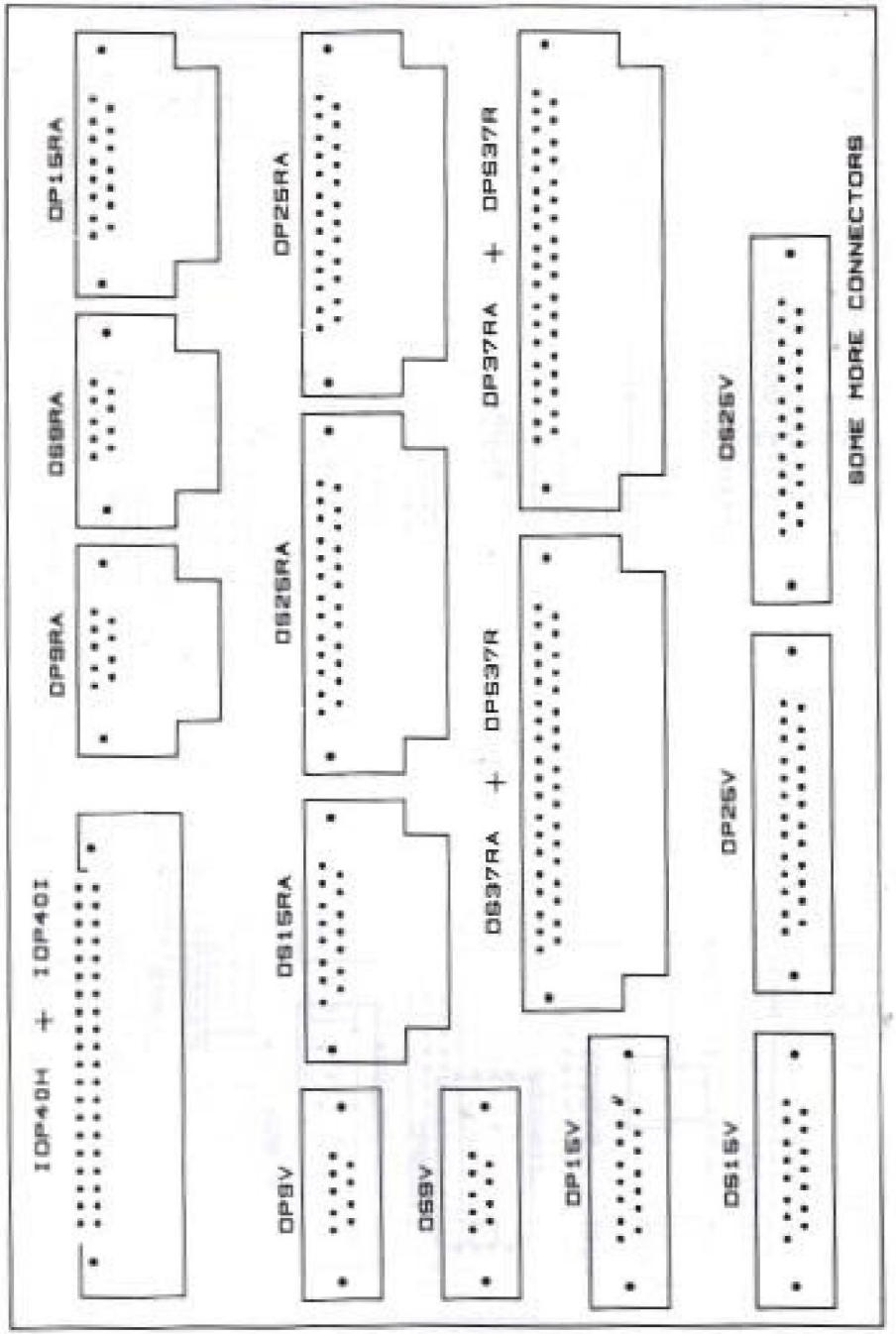

A-7

APPENBIX B
LIBRARY PAD SIZES

HOLE SIZE	PAD SIZE 0.026				
	CIR	SQU	OVL	REC	HEX
A	1	35	57	79	101
B					
C					
D					
E					
F					
G					

HOLE SIZE	PAD SIZE 0.030				
	CIR	SQU	OVL	REC	HEX
A	2	36	58	80	102
B					
C					
D					
E					
F					
G					

HOLE SIZE	PAD SIZE 0.040				
	CIR	SQU	OVL	REC	HEX
A	3	37	59	81	103
B	4	38	60	82	104
C					
D					
E					
F					
G					

HOLE SIZE	PAD SIZE 0.050				
	CIR	SQU	OVL	REC	HEX
A	5	39	61	83	105
B	6	40	62	84	106
C	7	41	63	85	107
D					
E					
F					
G					

HOLE SIZE	PAD SIZE 0.065				
	CIR	SQU	OVL	REC	HEX
A	8	42	64	86	108
B	9	43	65	87	109
C	10	44	66	88	110
D					
E					
F					
G					

HOLE SIZE	PAD SIZE 0.080				
	CIR	SQU	OVL	REC	HEX
A	11	45	67	89	111
B	12	46	68	90	112
C	13	47	69	91	113
D					
E					
F					
G					

PAD SIZE 0.093

HOLE SIZE	CIR	SQU	OVL	REC	HEX
A	14	48	70	92	114
B	15	49	71	93	115
C	16	50	72	94	116
D					
E					
F					
G					

PAD SIZE 0.100

HOLE SIZE	CIR	SQU	OVL	REC	HEX
A					
B	17	51	73	95	117
C	18	52	74	96	118
D	19	53	75	97	119
E					
F					
G					

PAD SIZE 0.125

HOLE SIZE	CIR	SQU	OVL	REC	HEX
B	20	54	76	98	120
C	21	55	77	99	121
D	22	56	78	100	122
E					
F					
G					

PAD SIZE 0.150

HOLE SIZE	CIR	SQU	OVL	REC	HEX
A					
B					
C					
D	23				
E	24				
F					
G					

PAD SIZE 0.200

HOLE SIZE	CIR	SQU	OVL	REC	HEX
A					
B					
C					
D					
E	25				
F	26				
G					

PAD SIZE 0.250

HOLE SIZE	CIR	SQU	OVL	REC	HEX
A					
B					
C					
D					
E	27				
F	28				
G					

HOLE SIZE	PAD SIZE 0.300				
	CIR	SQU	OVL	REC	HEX
A					
B					
C					
D					
E					
F	29				
G	30				

HOLE SIZE	PAD SIZE 0.350				
	CIR	SQU	OVL	REC	HEX
A					
B					
C					
D					
E					
F	31				
G	32				

HOLE SIZE	PAD SIZE 0.400				
	CIR	SQU	OVL	REC	HEX
A					
B					
C					
D					
E					
F	33				
G	34				

APPENDIX C Suggested Rules For Giving Names To Components

The names given to components in the component designer may be entirely your own choice but we suggest you follow the guidelines given below, making your own variations where desired. The components provided in the library follow the rules suggested here. The maximum number of digits for each name is 6.

DIL

Components are 0.3" pitch between rows unless specified by a prefix.

e.g. DIL24 = 24 pin dual row of 12 holes spaced 0.3" apart.
6DIL24 = 24 pin dual row as above but spaced 0.6" apart.

RESISTORS

The suffix indicates hole pitch in 0.01" units.

e.g. RES50 = a standard (0.1" diameter) resistor with pads placed 0.5" apart.

A prefix would indicate a specific body width in units of 0.01".

e.g. 35R100 or 35RE100 = an axial resistor 0.350" wide mounted on a hole pitch of 1.00"

Different styles within a species of component may be indicated by using a new letter to split the figures. This is also used to indicate a body size multiplier of 0.1" instead of 0.01".

e.g. RE2R10 = a radially mounted resistor 0.2" wide with pads placed on 0.1" centres.

Further examples are shown under capacitors below where type styles vary widely.

The letter X may be used to indicate a special component shape that is not normally part of a series of components, or where the pad size or footprint is not as might otherwise be expected.

e.g. 45RX20 = a thin resistor with leads bent to form a radial component 0.450" wide and with leads pitched at 0.200" on one edge of the footprint.

CAPACITORS

Capacitors come in a variety of styles but generally to the following classifications in so far as their pads and footprints are concerned:

AXIAL - Round or square bodied with the leads bent and soldered outside the footprint of the component.

RADIAL - Where both leads exit from one end of the component. Usually a polarised component and circular in footprint.

MOULDED - A radial component but rectangular in footprint and usually not polarised.

ELECTROLYTIC - Usually an axial component but polarised.

The initial letter of the above classifications is used along with a 0.01" suffix indicating solderpad pitch and a 0.1" prefix indicating the footprint size (width or diameter).

e.g. C4A85 = an axial capacitor 0.4" wide and mounted on pads placed 0.850" apart.

C5R10 = a radial capacitor 0.5" in diameter and with a lead pitch of 0.1". Polarisation is associated with pin 1 as standard.

C4R07 = a radial capacitor as above but notice that the hole pitch would be 0.075" as the pad position resolution is 0.025".

DIODES AND RECTIFIERS

These have been classified in the same manner as resistors detailed above.

BRIDGE RECTIFIERS

These have been given a reference based upon the current rating of the device e.g. BRC1.6 is a 1.6Amp bridge rectifier. Careful use of the library pages and creation of more pages for your own use, will help with the selection of components later on.

CONNECTORS

TSN - stands for Transition Connector e.g. 1TSN16 is a 16 pin transition connector with 0.1" pitch pins.

IDP - stands for Insulation Displacement Plug e.g. IDP26V is a 26 pin vertical mounting insulation displacement connector.

DP/DS - stands for either a "D" socket, or a "D" plug e.g. DS9RA is a right-angle mounting "D" socket with 9 pins. Note that "D" connectors do not have pins that are nicely spaced on a 0.025" grid and if you look carefully at the library pages you will see that every so often an extra 0.025" is included in the gap between pins in order to "make-up" the last space. Component pins move sideways sufficiently to allow for the slight discrepancy from pin to pin.

TRANSISTORS

The important point to remember about these devices is that they are polorised in the sense that the Netlist must point to the correct pins.

e.g. on TO-39 the emitter is pin 1
on TO-220 the emitter is pin 1, collector is pin 2 and the base is pin 3.
on TO-126 the emitter is pin 1, collector is pin 2 and the base is pin 3.

Try to keep the same arrangement and it will help to make things easier when creating the Netlist.

OTHER COMPONENTS

Many other components defy the logical method of classification, but fortunately these do not generally form a large part of any library. Be sure to create your own library pages from time to time, as this will make Component List Creation much easier.

PAD SIZES

The pad sizes may be specified with each component description but standard sizes have been used in the creation of the component library. (generally 0.050 round) The component pads may be changed readily in the Board designer program after the components have been placed. Some larger components have been given greater pad sizes, more suited to their size and you may check the size given by looking carefully at the library component pages in Appendix A.

DUALITY OF NAMES

Since the component name is only used in the definition of the shape and pad position of a PCB component, it will not appear in any list or specification and thus the name RES50 (for examle) may be equally well used as the component name for a small axial capacitor if so desired.

APPENDIX D GLOSSARY

Axial

Describes a component with leads exiting from both ends e.g. a normal resistor.

Bottom Side

This side of the PCB is viewed "through" the top layer in order that the two sides may be viewed simultaniously. Unless the colour palette has been changed, components will be placed on the BOTTOM SIDE of the PCB when the cursor is Red. Tracks placed with a Red cursor will be on the TOP SIDE and coloured Red.

Component List

A list of components used in the PCB design. Rather like a conventional parts list, except that this list cross-references the component reference, R1, C3, U5 etc., with the shape stored in the components library, RES50, CAP40, DIL14 etc. The Board Designer program uses the component list, to assist in component placement and to obtain the shape of the component to place from the library.

Component Name, Component Description

A six character name that is used to describe the shape of a component and the position of its pads in relation to each other and to is shape (footprint). e.g. RES60, DIL14

Component Reference

A single alphabetic character with up to 3 numeric digits. Used to identify a component uniquely in the design. e.g. R1, U2, C50

Connection

This is an arbitary line between two or more solder pads, that defines the electrical connectivity of the components involved. It shows up as a white line in the board designer screen. When the tracks are placed (routed) the connection line dissappears. If the component is moved after routing, the white connection lines will re-appear where appropriate.

Connectivity

The electrical relationship between the terminals of parts in the PCB design.

Cursor

The cross-hairs indicating the action point on the screen are called the cursor. They are moved by the trackerball or mouse.
Footprint

The shape or outline of a component. Sometimes used to describe the amount of PCB space taken up by the component (Real Estate). It is the footprint that will be drawn on the SILK SCREEN plots.

Gridlock

This is the resolution that the cursor will place things on to. Sometimes it is very useful to only allow placement of PCB items on to a 0.100" grid (for example). If the gridlock is set to 4 then the placement of items will only be on 0.100" centres. Other gridlock values of 0.025" (1) and 0.050" (2) are selectable. Think of the gridlock as a hidden area of points onto which items will be placed.

Net List

This is an ASCII file which describes the interconnections between components in the design. Every component has pins which are numbered from 1 upwards and the Net List describes the connections between the pins of different components in the design.

e.g. 3 R1 1 U13 C2 2 would be interpreted as follows:-

3	this is the net list line number (node number)
R1	1.....pin 1 of component R1 is connected to:
U1	3.....pin 3 of component U1, which is also connected to:
C2	2.....pin 2 of component C2.

Since this node contains these 3 components the three pins mentioned will be connected together in the design. This also means that nothing else will be connected to this node. (Otherwise it should have been described in the same Net List line) A net list line may continue for many screen lines before being terminated with a RETURN.

Note: it is possible for very long net list lines to be continued with a following line.

Pad

Sometimes incorrectly used synonymously with PIN. This is the soldering pad of the component. Each component has one or more pins which have to be soldered onto the PCB. The Pad No. decribes the shape and size of the area of copper that the component will be soldered to.

Plating Bar

A series of track connections made to the edge of finger connectors in an area of PCB that will later be trimmed off. The track provides an electrical connection allowing electrolytic plating of the edge connector.

Radial

Describes a component with both mounting leads exiting from the same end of the component e.g. a tantulum bead capacitor.

Ratsnest

This is the descriptive name given to the whole collection of connection lines (see connection). A ratnest screen easily shows how "busy" any particular area of the PCB design will be and may be profitably used to assist sensible re-positioning of the components.

Route

The whole sequence of track sections leading from one component to another. As distinct from a TRACK which is more correctly the copper at any one point or section of a route. Also distinct from a NET which is the total series of routes connecting many components. In the Board Designer, the ROUTE often ends at a VIA, which is considered a component from the point of view of the program. Although inexact in this latter use, this concept is found useful.

Track

A section of copper of defined width, usually 0.015", 0.025", 0.035", 0.050" or 0.080". Can be on either side of the PCB, distinguished by it's colour, usually Red or Blue. Sometimes a section of a route will be described as a track.

Topside

The side of the PCB facing you when you view it. This is the side that components are normally mounted on, and for single-sided PCB's the tracks are on the other side (BOTTOM SIDE). Unless the colour palette has been changed, components will be placed on the TOP SIDE of the PCB when the cursor is Blue in colour. Tracks placed with a Blue cursor will be on the BOTTOM SIDE and coloured Blue.

VIA

This is a hole in the PCB through which the connection passes from one side of the board to the other. In through-hole-plated PCB's the inside of the hole is electrolytically plated, in order to create the connection. In conventional double-sided PCB production the hole may be pinned and soldered on each side.

APPENDIX E
ERROR MESSAGES IN BOARD DESIGNER

Component Not Found

Issued if the "select" command is given when the cursor is not near a pad of any component. The most common cause of the error is that the component pad is on one side of the PCB and the cursor is on the other!

Component Shape Not Found

This occurs when the component name you typed in was not found in the library. Make sure that CAPS LOCK is on and the syntax of the component name is correct. See Appendix C.

Connector Not Found

The program was unable to find the finger you are attempting to select. Make sure the cursor is the same colour as the finger and at the right end of the finger (track connection end).

Copper Area Not Found

Issued if the "select" command is given when the cursor is not near the start point of a copper area. This can be because the cursor is set to operate on the other side of the PCB from the copper.

Copy Attempted Off Board

Given when an attempt was made to recall a saved track to a new position when part of it would be off the board. Check that you are using the correct recall (normal or backwards) and that the cursor is sufficiently far right and down for this command.

Copy Backwards Not Allowed With Vias

This is not available as the vias would become out of place. To get over the problem delete the present track totally and reposition the start so that it is at the other end of the track. Now press R to recall the track forwards.

Edge Has Too Few Points

This error is given if you try to enter the board edge with less than 3 corners.

ERROR: .....

An unexpected OS error has occured. This can occur if the correct disc is not in the drive or there is a fault on the disc. Save the board to a seperate disc and investigate.

Invalid Selection

A key was pressed, or command initiated that was not expected by the system at that point. Often caused by asking for a "start action" command with no function selected. This happens because the functions are toggled on and off by the same key action and so it is possible for the key to be pressed twice.

Library Index File Not Found

Issued when the disc file containing the component names ("LIBINDX") was not found in your data disc drive. Make sure that the library disc is inserted into the correct drive for your system.

Move Attempted Off Board

Given when an attempt was made to move components out of the PCB design area. Since the cursor is at the bottom and right hand edges of the move box the only places this error can occur is on the left and top edges of the design area.

Netlist Already Used

An attempt was made to place a component or edge connector (finger) with the same component description as one already on the board. Note that you can not physically see or be sure of the netlist descriptions of the components already on the board unless they were placed automatically as footprint words - see section 5-28,29.

No Component In Memory

This error occurs when you try to copy a component before one has been placed manually first. Enter the component name of the component shape you want, place the component and then use COPY.

No Memory Left

The program has run out of space in sideways RAM to store your PCB design. You may still have some space left as every time you delete a item on the board the file is not shuffled up. To regain this space perform a garbage search by selecting M from the main menu. Also make sure your machine is configured to the correct maximum memory size by selecting D for Defaults from the main menu.

No Route In Memory

An attempt was made to Recall a track when no saved routing exists in memory. Note that saved tracks are lost when you leave the Board Designer program.

Pad Found - Could Not Connect To It

When attempting to "finish" a route the program could not connect the last section of track. Usually caused because the necessary section of track would have to be a non-45 degree angle to be connected to the nearest pad.

Pad Not Found

The pad you were attempting to select was not found near the cursor position. Check the colour of the cursor is the same as the pad and retry.

Reposition Start

Usually seen during MOVE TRACK, this message advises you to place the cursor over the start position of the track and select start action. Usually the old track route will be displayed ready for finishing or remodification.

Caused by deleting the first section of track. If the DELETE key is used to remove all elements of a track line then this message will be given so that you may start again.

Route Too Long

Both the tracks and the board edge have a maximum length of 61 parts. An attempt was made to exceed this. It is possible to create a longer track whilst still maintaining connectivity if a via is used within the route. Press "finish" one point after the via, erase this small piece of track and re-enter a new track connected to the via.

Track Has a Non 45 Degrees Angle

Some element in the route, usually the section being worked upon is not at 45 degrees when completion is called for by the "finish action" command. Tracks may only be horizontal, vertical or 45 degrees. Sometimes, while editing tracks, this error message occurs when you think that no error is there. Use the arrow keys to show you where hidden sections of track may be and then use the DELETE key to remove them.

Note that it is possible to enter a track with a non 45 degrees angle as a ratsnested track. To do this press N.

Track Not Found

Issued if the "select" command is given when the section of track indicated is not nearby. This can be because the corners of the track were not selected or because the cursor is on one side of the PCB, while the track is on the other!

Via Already Here

An attempt was made to place two vias in a row. This is not allowed as they would be superimposed.

Via Cannot Be First/Last In Track

Caused by selecting "change side of PCB" when the first or last section of track has just been started. As pads may be double-sided it is not normally necessary to place a via on the first or last points in a track. However, if you wish to, you may defeat this control by pressing "select" twice over the same place and then selecting a side change.

If you wish to change side of the PCB for any track, do this before selecting the start point, this will enable you to start a track on any side of the PCB.

Warning - No Pad/Pin Found

Issued at the start or finish of track laying when the system could not "lock" on to a pad or pin of a component or via. You may want to start or finish a track in "mid air", but normally this is not desired and so the system issues a warning message. You may ignore the message if you wish, but a close (scale 2) inspection of the proposed junction is advised.

A common cause of this message is to push the "finish action" command before using "select action" to complete the last section of track, thus the finish point is one track section away from where you intended.

Word Not Found

Issued if the "select" command is given when the cursor is not near the top left of a beginning of a word. The most common cause of this error is that the word is on one side of the PCB and the cursor is on the other!

You Can Go No Further Back

This error occurs when the left arrow key is pressed and the cursor is already at the start of the board edge or track. If you wish to change the start position press DELETE here and reposition it using "select".

You Can Go No Further Forward

This error occurs when the right arrow key is pressed and the cursor is already at the end of the track or board edge. Note that if you place a track with vias in it the route is split into several tracks separated by the vias which are components. This means that you can no longer edit these vias by using MOVE TRACK and deleting them using the cursor and delete keys. If this is the problem use MOVE/ERASE component.

APPENDIX F PLOTTER COMPATIBILITY INFORMATION

The plotter output generator is designed to drive a Hewlett-Packard 7475A compatible plotter, which is the standard that most plotters conform to. The program has been tested on a Hitachi 672-XD and a Rolland DXY-880A and since it only uses the basic plotter commands, should work without modification on most plotters. If by chance your plotter is not compatible, the output procedures in the plotter program can be changed by altering them to suit your own plotter. To facilitate any changes, the following is an explanation of the output procedures lines 970 - 1070 of the plotter output generator filename "$.PLOTTER". Be sure to make a back-up copy of your master disc before changing the program!

Note that all coordinate input to the procedures is in plotter units of 0.025 mm steps.

If any additional variables are needed use uppercase, but not A to Z, or A% to Z%, which are already used.

Procedures

PA Output Start.....IN and VS Commands

Executes *SPOOL (filename) or VDU 2 depending on whether 'dump to disc' was selected. Outputs start information including speed of pen movement in line 980 ("VS 8;").

QA Output End.....PU Command

Executes *SPOOL or VDU 3 depending on whether 'dump to disc' was selected. Outputs pen-up command.

SA Output Shift.....RO 90 Command

Outputs 90 degree shift command.

TA Output Move.....PU and PA Commands

Outputs a move command to plotter taking into account mirror-image, scale and offsets in effect.

UA Output Draw.....PD and PA Commands

Same as above, except outputs pen-down first.

YA Output Change Pen...SP Command

Prompts insertion of pen or outputs pen command depending on number of pens selected in plotter menu.

Variables

l%	dump-flag (dump to disc or plot)
d$	filename for dump
hb%	x input in plotter units
ib%	y input in plotter units
J	inverse-flag (mirror-image or not)
K	inverse-right (rhs edge of board in plotter units)
va%	scale multiplier
t%	offset x in plotter units
u%	offset y in plotter units
jb%	pen number input
k%	pens-flag (1 or 4 pens)

INDEX

AREA COMMAND 5-10
AUTO COMPONENT ENTRY 5-33

BACKING UP DISCS 1-2
BOARD DESIGNER
- INTRODUCTION 5-1
- MENU 5-2
- MESSAGE PANEL 5-3
- THE 1-24

BOARD EDGE SEE PCB OUTLINE
BOARD WORD
- ERASE 5-19
- MOVE 5-13
- PLACING 5-44

BOOTING THE PROGRAM 1-15

CLEAR BOARD 1-19
COMPONENT
- AREA MOVEMENT 5-10
- AUTO ENTRY 5-33
- BOTTOM MOUNTING 2-31
- COPY ENTRY 5-32
- ERASE 5-15
- FOOTPRINT 2-4
- LIBRARY NAME ALTERING 2-11
- LIBRARY NAME DESCRIPTION 2-2
- MANUAL ENTRY 5-29
- MOVE 5-6
- PIN NUMBER 2-22,2-23,2-28
- PLACING 5-28
- SURFACE MOUNTED 2-29
- VIEWING DIRECTION OF 2-30

COMPONENT DESIGNER
- INTRODUCTION 2-1
- COMMAND KEYS 2-7
- EDIT MENU 2-18
- EDIT MENU COMMANDS 2-25
- EXECUTIVE MENU 2-6
- THE 1-25

COMPONENT LIST,
- INTRODUCTION 3-1
- FILE TESTING 3-6
- MENU 3-2
- THE 1-27

COPPER AREAS
- ERASE 5-18
- PLACING 5-41

COPPER WORD SEE BOARD WORD
COPY COMPONENT ENTRY 5-32
CREATING A NETLIST 9-8

DEFAULT SETTINGS 1-21
DISCS & DIRECTORIES 1-7
DISCS, MAKING NEW LIBRARIES 1-8
DOT MATRIX OUTPUT SEE PRINTER

EDGE CONNECTOR
- ERASE 5-17
- MOVE 5-14
- ORIGIN OR CONN. POINT 5-39
- PLACING 5-34
- PLATING BAR 5-40

ERASE, BOARD DESIGNER 5-15
ERASING A COMPONENT FROM THE LIBRARY 2-15
EXTERNAL APPLICS PROGRAM 1-30

FINGER SEE EDGE CONNECTOR
FOOTPRINT WORDS
- ERASE 5-20
- MOVE 5-12
- PLACING 5-48

FREE MEMORY 1-22

HARDWARE REQUIREMENTS 1-4

LENGTH OF FINGERS 5-37
LIBRARIES, CREATING NEW 1-8
LOAD BOARD 1-17

MAIN MENU, THE 1-16
MANUAL COMPONENT ENTRY 5-29
MEMORY BUSSING (COPY ROUTE COMMANDS) 5-70
MEMORY LEFT 1-22
MOUNTING HOLES 2-28
MOUSE/TRACKERBALL BUTTON FUNCTIONS 1-9
MOVE, BOARD DESIGNER 5-6

NETLIST EDITOR
- INTRODUCTION 4-1
- MENU 4-2
- THE 1-26
- TESTING 4-5
- TRACK THICKNESS 4-13

NORMALLY MOUNTED COMPS 2-29

OPERATING SYSTEM COMMANDS 1-23

PAD
- BOARD DESIGNER 5-59 to 5-62
- CHANGING LIB. SIZES 2-16,2-36
- ERASE 5-22
- LISTING LIBRARY SIZES 2-13
- NUMBER 2-22,2-23,2-28

PCB
- DESIGN PROCEDURE 1-31
- DOUBLE SIDED 1-12
- METHODS OF DRAWING 1-32
- MULTILAYER 1-14
- OUTLINE
  - ERASE 5-21
  - MODIFICATION 5-11

PLACING 5-53,9-3
PRODUCTION PHILOSOPHY 1-10
SINGLE SIDED 1-11
SURFACE MOUNTED AND MIXED TECHNOLOGY 1-13
PIN SEE PAD
PITCH OF FINGERS 5-36
PLATING BAR 5-40
PLOTTER
INTRODUCTION 6-1
ARTWORK TYPES 6-6
BOARD OUTLINE 6-16
CHECKPLOT 6-8
COMMAND MENU 6-5
DUMPING FILES TO DISC 6-23
MIRROR IMAGE COMMAND 6-29
NUMBER OF PENS IN USE 6-22
OFFSET 6-19
PAD HOLES 6-18
PROGRAM 1-28
RECOMENDED PEN SIZES 1:1, 2:1
PLOTS 6-25
SCALE OF OUTPUT 6-15
SIDE OF PCB 6-12
90 DEGREE ROTATION 6-17
PRINTER
INTRODUCTION 7-1
AREA OF DRAWING TO PLOT 7-18
ARTWORK TYPES 7-5
COMMAND DESCRIPTION 7-4
EDGE OF PCB 7-14
FORM FEED 7-21
MIRROR IMAGE PRINTING 7-23
MODIFYING THE PRINTER GRAPHICS CODES 7-24
NUMBER OF PASSES OF PRINT HEAD 7-22
OFFSETS ON THE PAPER 7-17
PAD HOLES 7-16
PAPER SIZE 7-19
PAUSE FOR PAPER CHANGE 7-20
PROGRAM 1-29
SCALE OF OUTPUT PLOTS 7-13
SIDE OF PCB 7-10
SPLITTING UP THE DRAWING 7-19
90 DEGREE ROTATION 7-15
RAM POSITIONS, CHANGING 1-5
RATSNEST
ALTERING THE START POINT OF A CONNECTION 9-15
COMMAND (RNEST) 5-63
GENERATION 5-64
ROUTING FROM A RATSNEST CONNECTION 5-65
SKIPPING THROUGH 5-64
ERASE 5-23
TESTING 4-5
TRACK MANUAL CREATION 5-71
READ NETLIST 1-20
RNEST SEE RATSNEST
ROM INSTALLATION 1-3
SAVE BOARD 1-18
SETTINGS, DEFAULT 1-21
SHADOW BOARD COMMANDS 1-6
SIDE OF PCB FOR PLACING COMPONENT 5-30
SILK SCREEN TEXT 5-48
SINGLE SIDED PCB COMPONENT PLACING 5-31
SIZE OF TRACKS 5-26
STARTING UP THE PROGRAM 1-15
SURFACE MOUNTED OR NORMALLY MOUNTED COMPONENTS 2-29
TESTING A NETLIST 4-5
TESTING THE COMP. LIST FILE 3-6
TEXT
COPPER SEE BOARD WORD
SILKSCREEN SEE FOOTPRINT WORD
TRACK
ADDING EXTRA SECTIONS INTO A ROUTE 9-28
CHANGING SIDE 5-67,9-29
CHANGING SIZE 5-66
CHANGING THE THICKNESS OF A ROUTE 9-21
CORRECT ROUTING MISTAKES 9-19
CUTTING A ROUTE 5-8
ERASE 5-16
KEYBOARD COMMANDS 5-24
MOVE 5-7,9-12
NECKING A 9-31
OUT OF ORDER ROUTING 9-18
PLACING 5-24
REMOVING A SECTION 5-9
ROUTING DIRECTIONS 9-17
ROUTING THE BODY OF THE TRACK 5-68
ROUTING THE LAST SEGMENT OF THE TRACK 5-69
SIDE OF PCB WHEN STARTING 9-14
SIZE 5-26
THICKNESS COMMAND 4-13
TRACKERBALL/MOUSE BUTTON FUNCTIONS 1-9
VIA
ERASE 9-23
PLACING 5-25
SIZE 1-21
VIEWING DIRECTION OF COMPONENTS 2-30